"Testbedding" MIMO HSDPA versus WiMAX

Markus Rupp
Sebastian Caban, Christian Mehlführer
October 3, 2008

contact email: mrupp@nt.tuwien.ac.at
web: http://www.nt.tuwien.ac.at/rapid_prototyping

Outline

- MIMO Testbed
- WiMAX Measurements
  - signal generation and reception
  - IEEE 802.16-2004 (Section 8.3) with OFDM physical layer
  - feedback realization
  - achievable and measured throughput
- HSDPA Measurements
  - signal generation and reception
  - feedback realization
  - achievable and measured throughput
- Conclusion

Evaluating MIMO radio communication

- theoretically
- by pure simulation
- by channel sounding
- utilizing a testbed
- utilizing a prototype
- using the final product

degree of realism

effort

MIMO Testbed [T1,T2]

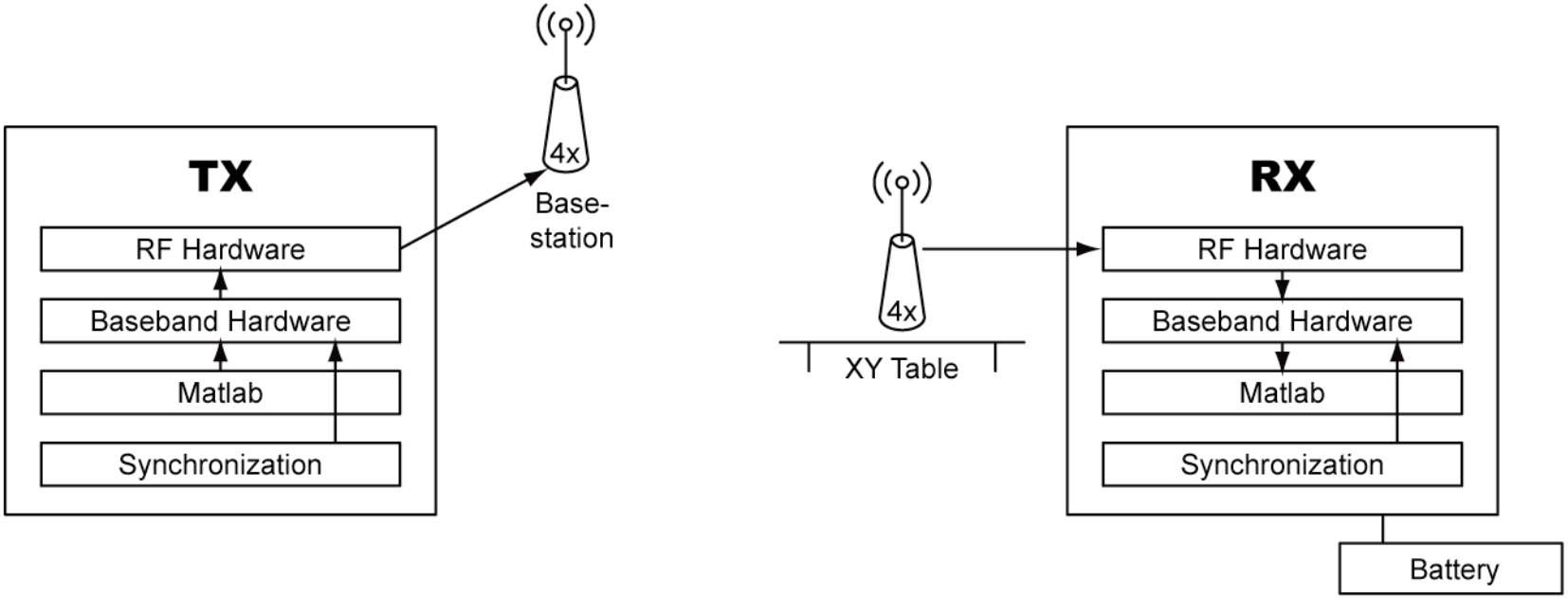

Data is created and evaluated in Matlab ...

Number of Antennas
: **4x4**
Bandwidth: **5 MHz**
Center Frequency: **2.5 GHz**

MIMO Testbed [T1,T2]

- **MIMO WiMAX 802.16-2004**
  OFDM physical layer
  - including channel coding and decoding
  - SISO and MIMO
- **MIMO HSDPA (TxAA, DTxAA)**
  CDMA physical layer
  - including channel coding and decoding
  - SISO and MIMO

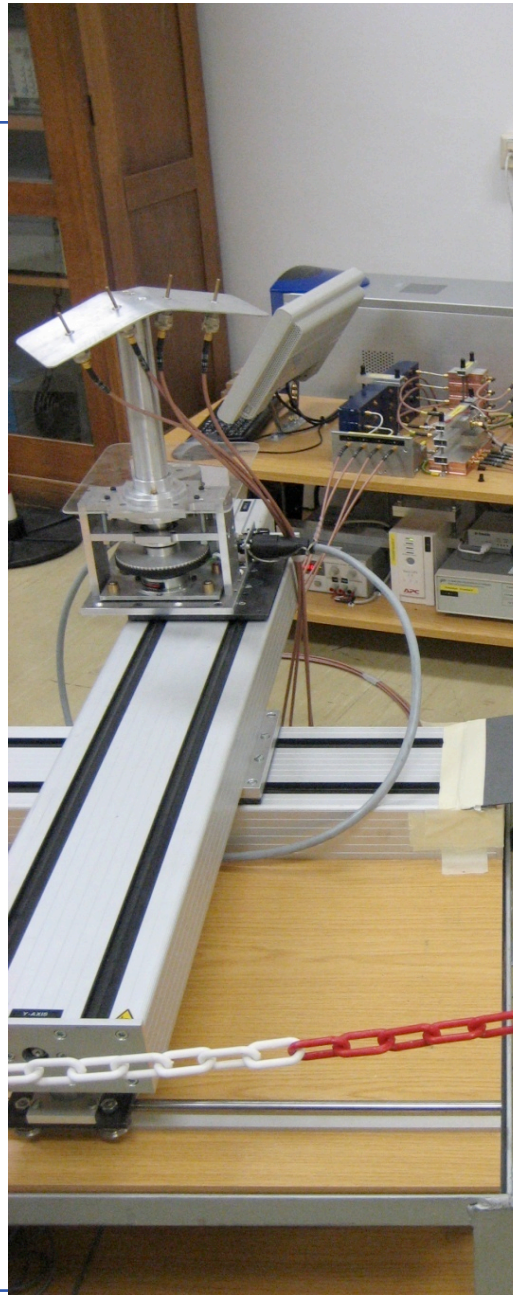

Outline

- MIMO Testbed
- WiMAX Measurements
  - signal generation and reception
  - IEEE 802.16-2004 (Section 8.3) with OFDM physical layer
  - feedback realization
  - achievable and measured throughput
- HSDPA Measurements
  - signal generation and reception
  - feedback realization
  - achievable and measured throughput
- Conclusion

Adaptive Modulation and Coding (AMC)

- Encoding
  - concatenated Reed-Solomon / convolutional code
  - puncturing depending on AMC information
  - optional block/convolutional turbo coding
  - Alternatively: LDPC coding
- Adaptive symbol mapping
- Optional Alamouti space-time coding

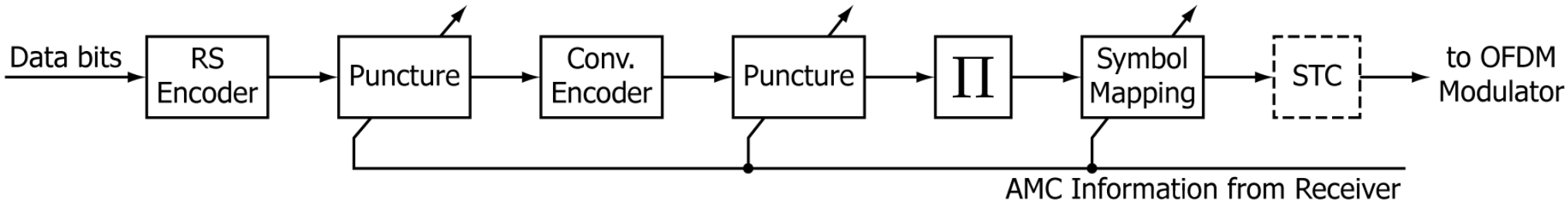

Coding and Modulation

AMC value	Modulation	RS Code Rate	CC Rate	Overall Code Rate
1	2-PAM	1	1/2	1/2
2	4-QAM	3/4	2/3	1/2
3	4-QAM	9/10	5/6	3/4
4	16-QAM	3/4	2/3	1/2
5	16-QAM	9/10	5/6	3/4
6	64-QAM	8/9	3/4	2/3
7	64-QAM	9/10	5/6	3/4

OFDM Frame Structure

- 3 OFDM symbols preamble
  1. Synchronization
  2. Channel estimation
  3. Control information
- Subcarrier distribution
  - 192 data subcarriers
  - 8 pilot subcarriers
  - 1 zero DC subcarrier
  - 55 guard band subcarriers
  - $\rightarrow$ 256 total

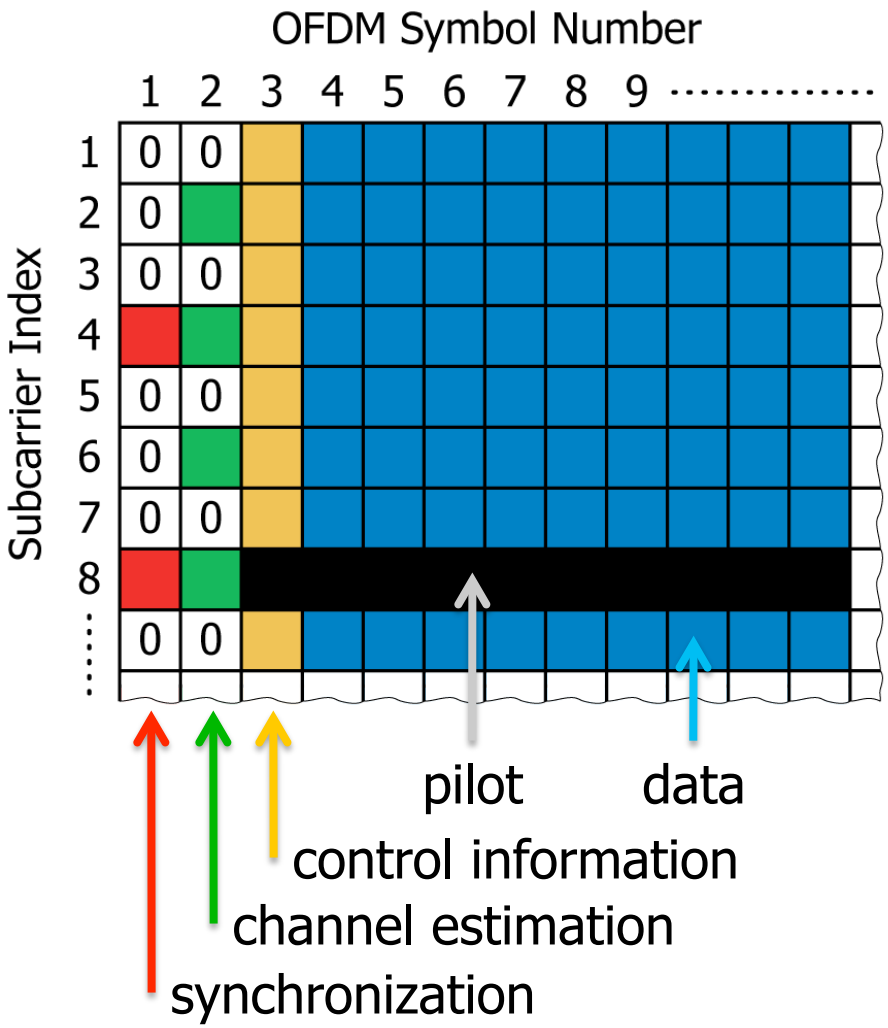

OFDM Modulation and Demodulation

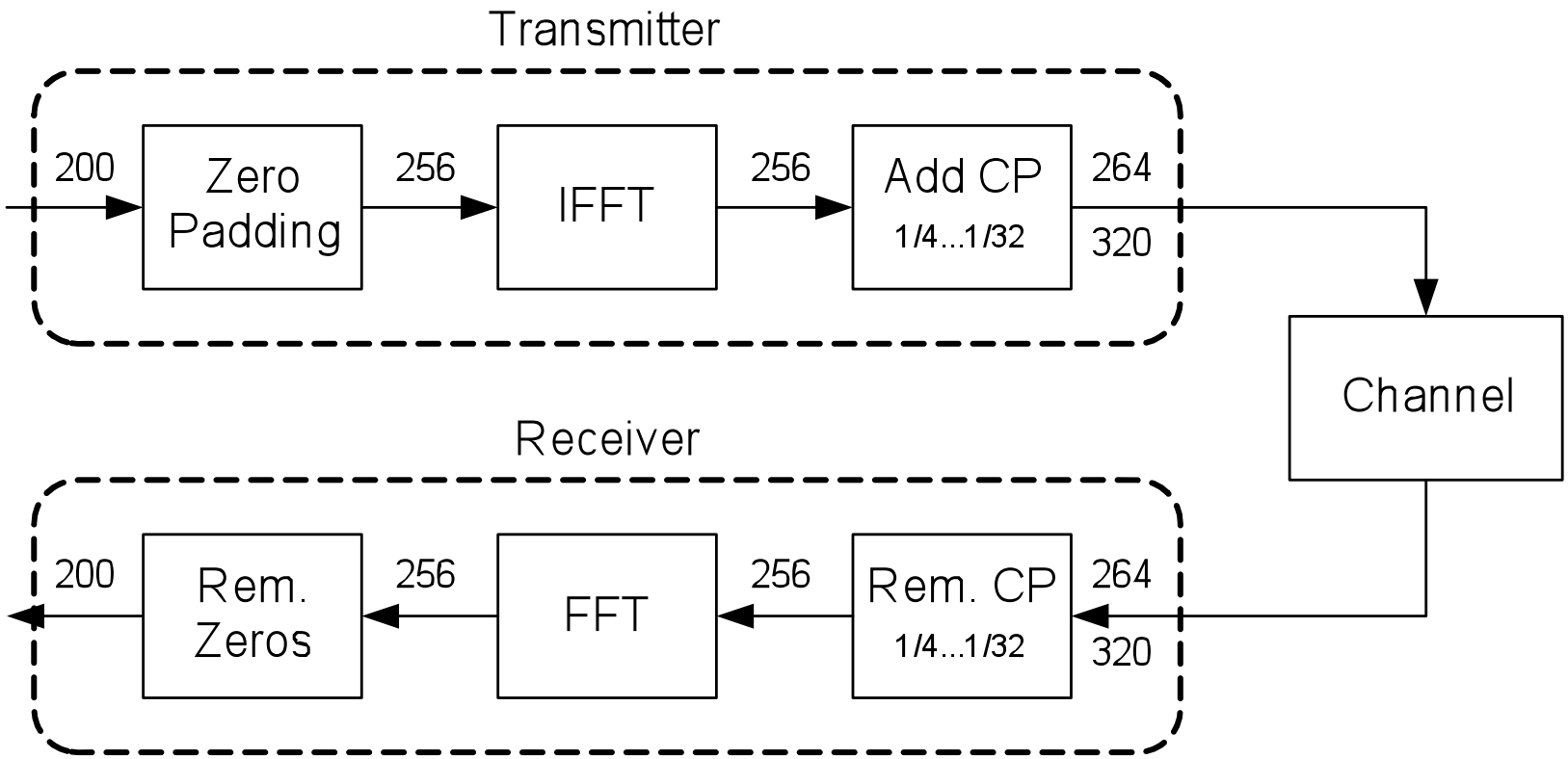

Measurement Setup [W2]

- 3 scenarios
  1. NLOS, outdoor-to-indoor
  2. NLOS, outdoor-to-outdoor
  3. LOS, outdoor-to-indoor
- Parameters
  - 5 MHz channel bandwidth
  - Cyclic prefix 1/4
  - 192 carrier OFDM
  - Rx antenna distance 1.2λ
  - Tx antenna distance: 2.75λ
  - Tx antenna height: 16m

Measurement distance: 50-100m

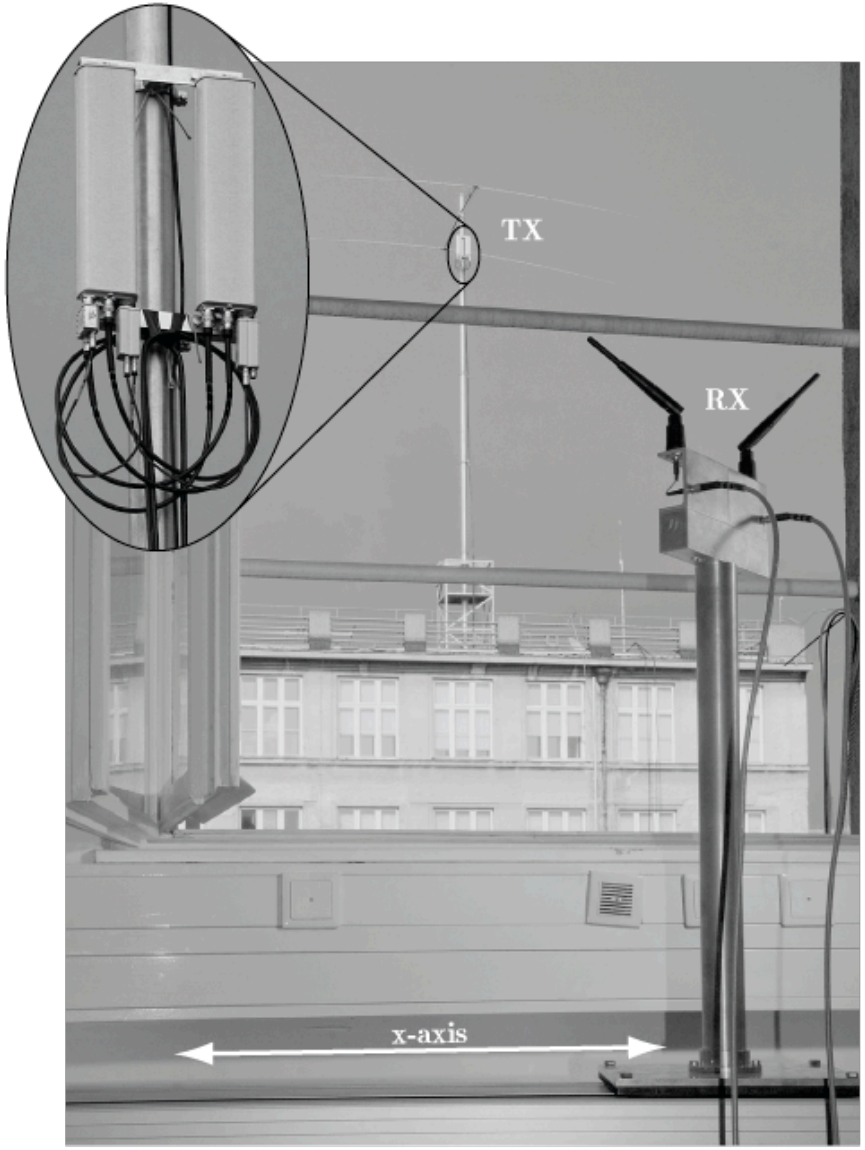

Block Transmission [W2]

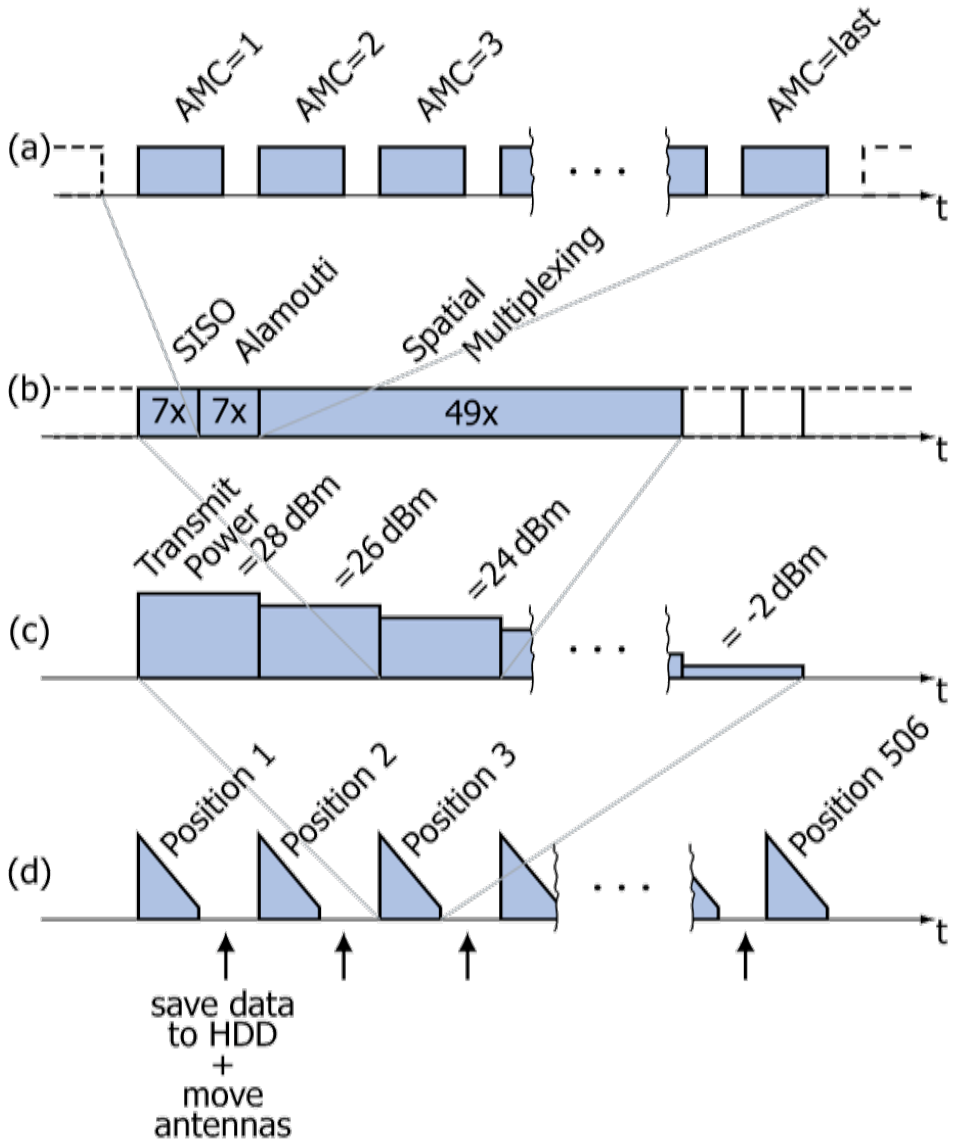

1. SIMO, 7 AMC schemes, 3 bit feedback
2. MIMO with Alamouti, 7 AMC schemes, 3 bit feedback
3. MIMO with spatial multiplexing, **same** coding scheme on both antennas, 3 bit feedback
4. MIMO with spatial multiplexing, **individual** coding schemes on both antennas, 6 bit feedback

Measured Channel Coefficients [W2]

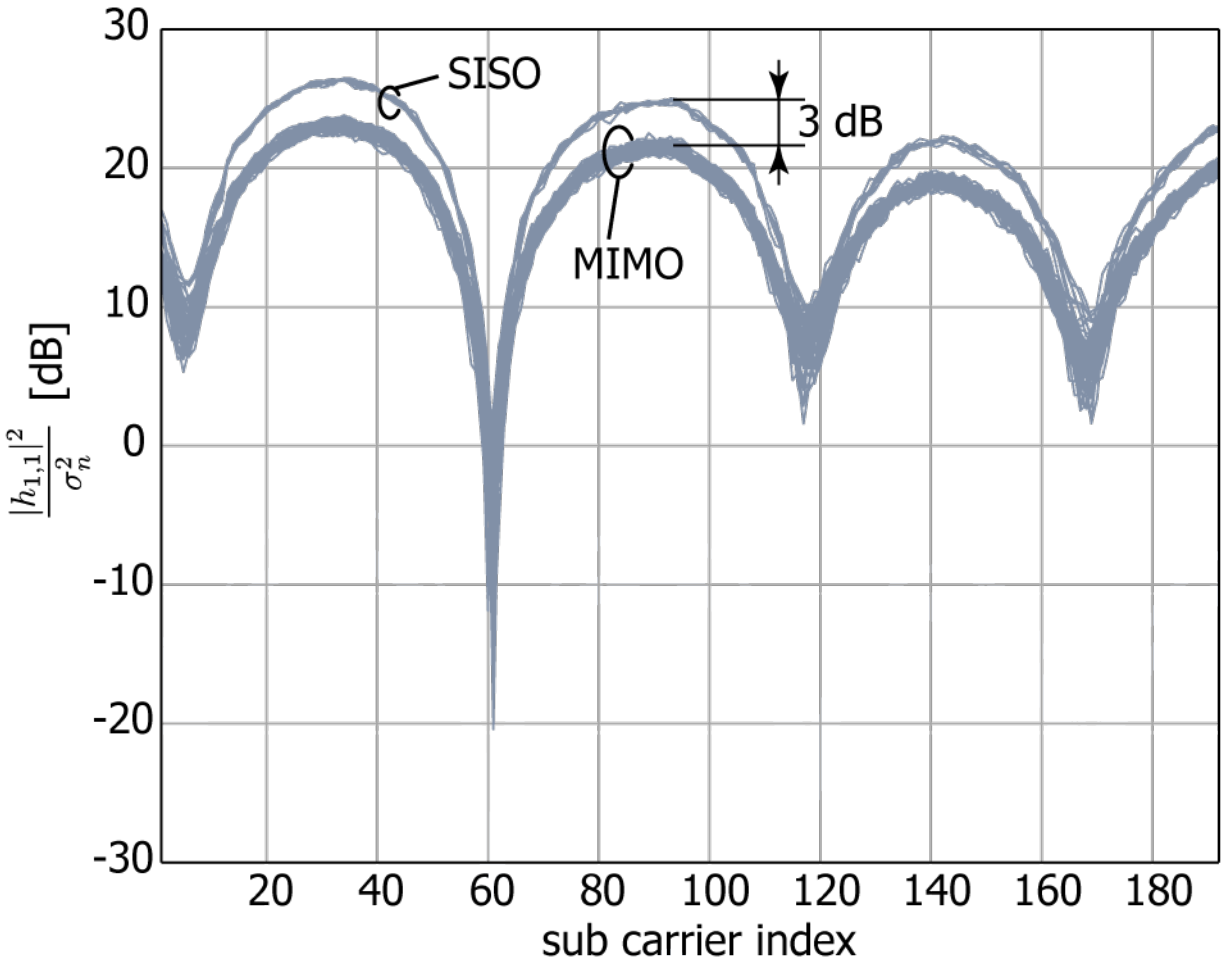

Duration of measurements: ~200ms

One Receive Antenna: NLOS outdoor-to-outdoor [W2]

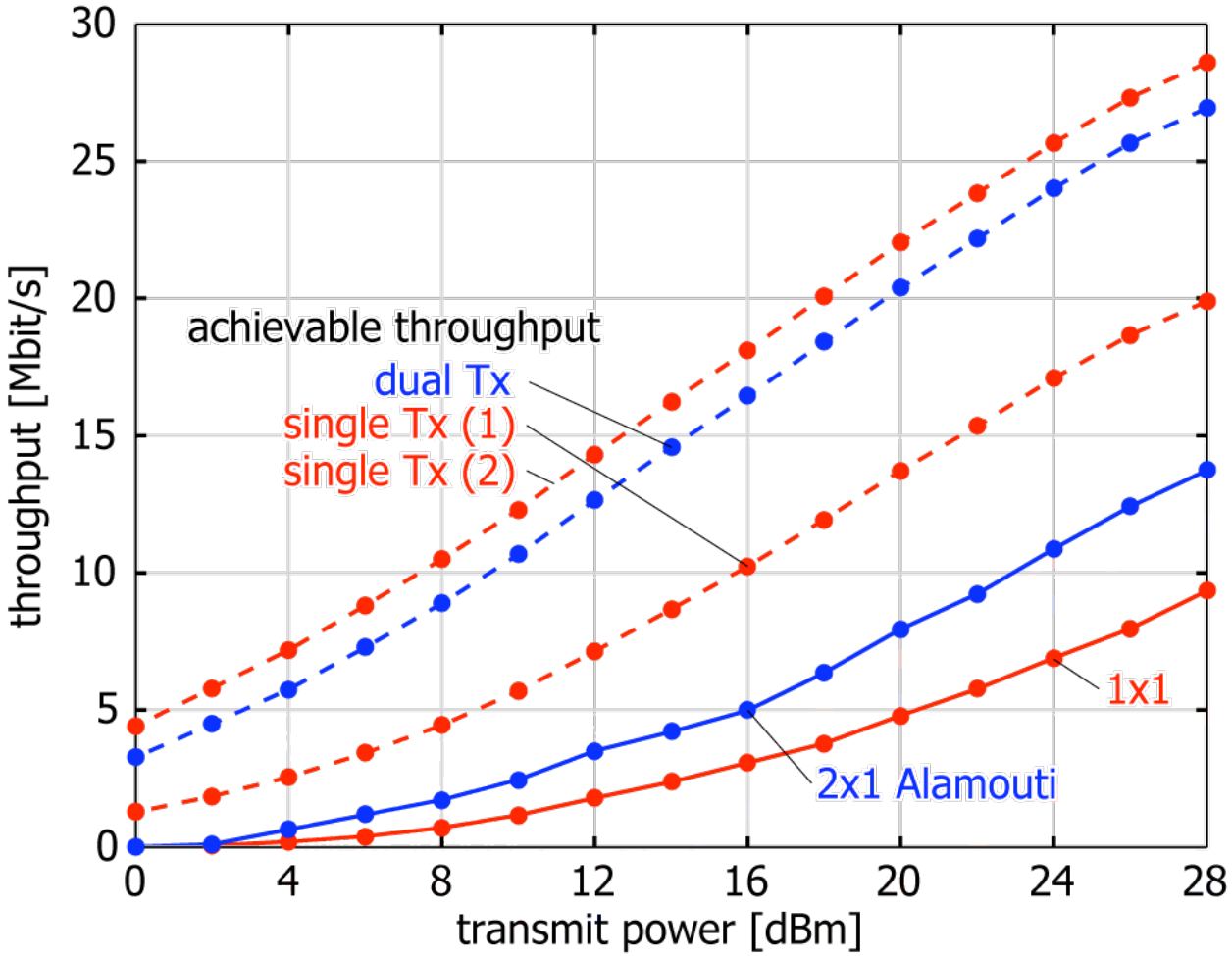

One Receive Antenna: NLOS outdoor-to-indoor [W2]

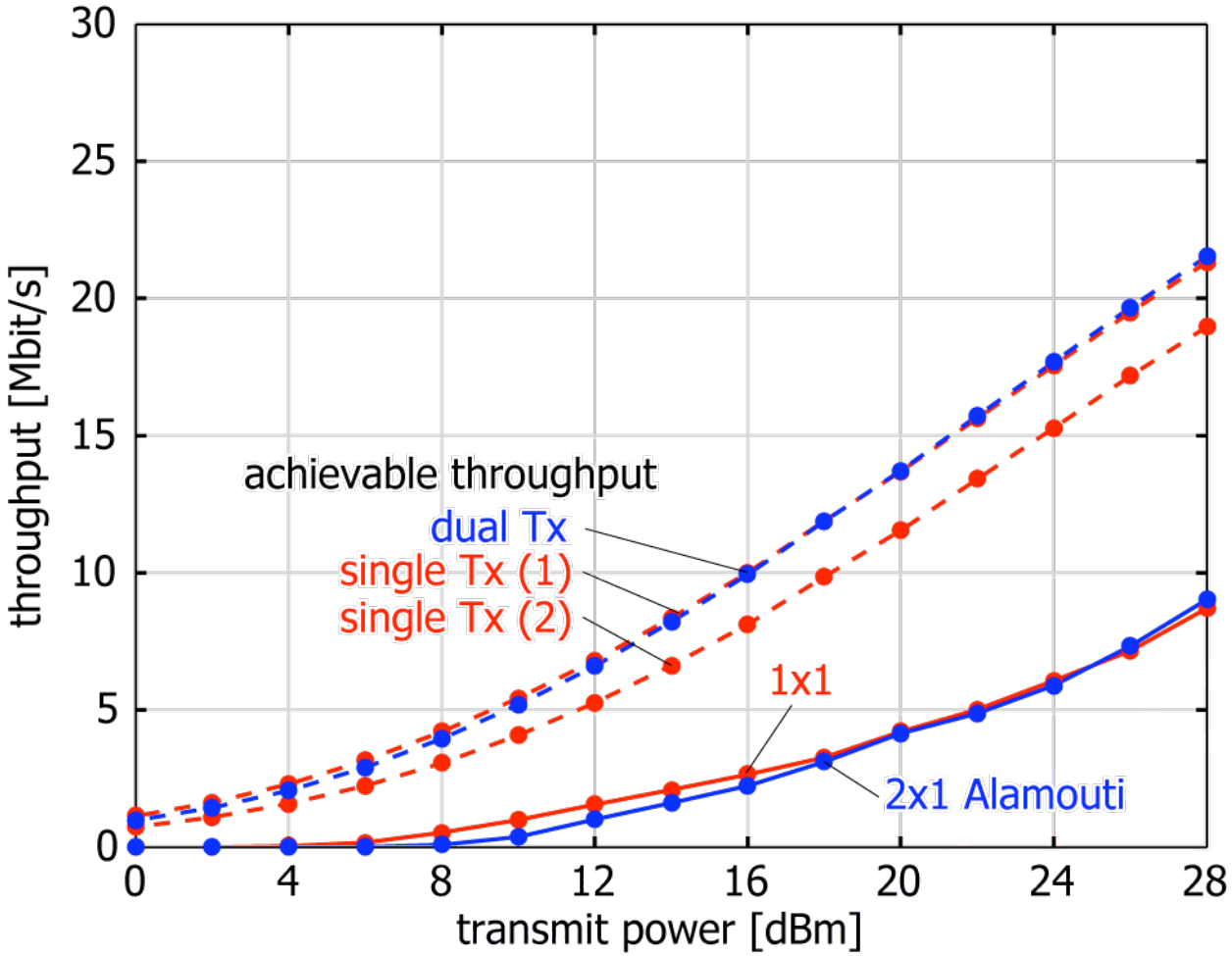

One Receive Antenna: Conclusions [W2]

- The measured scenarios behave asymmetric with respect to the transmit antenna
- If channel is known at the transmitter, antenna selection can improve the performance
- Alamouti looses (slightly) compared to single antenna transmission
  - more sensitive channel estimation errors
  - 3dB less power for training
  - Asymmetric scenario

- Huge gap of >10 dB between measured and achievable throughput!

Two Receive Antennas MRC: LOS outdoor-to-indoor [W2]

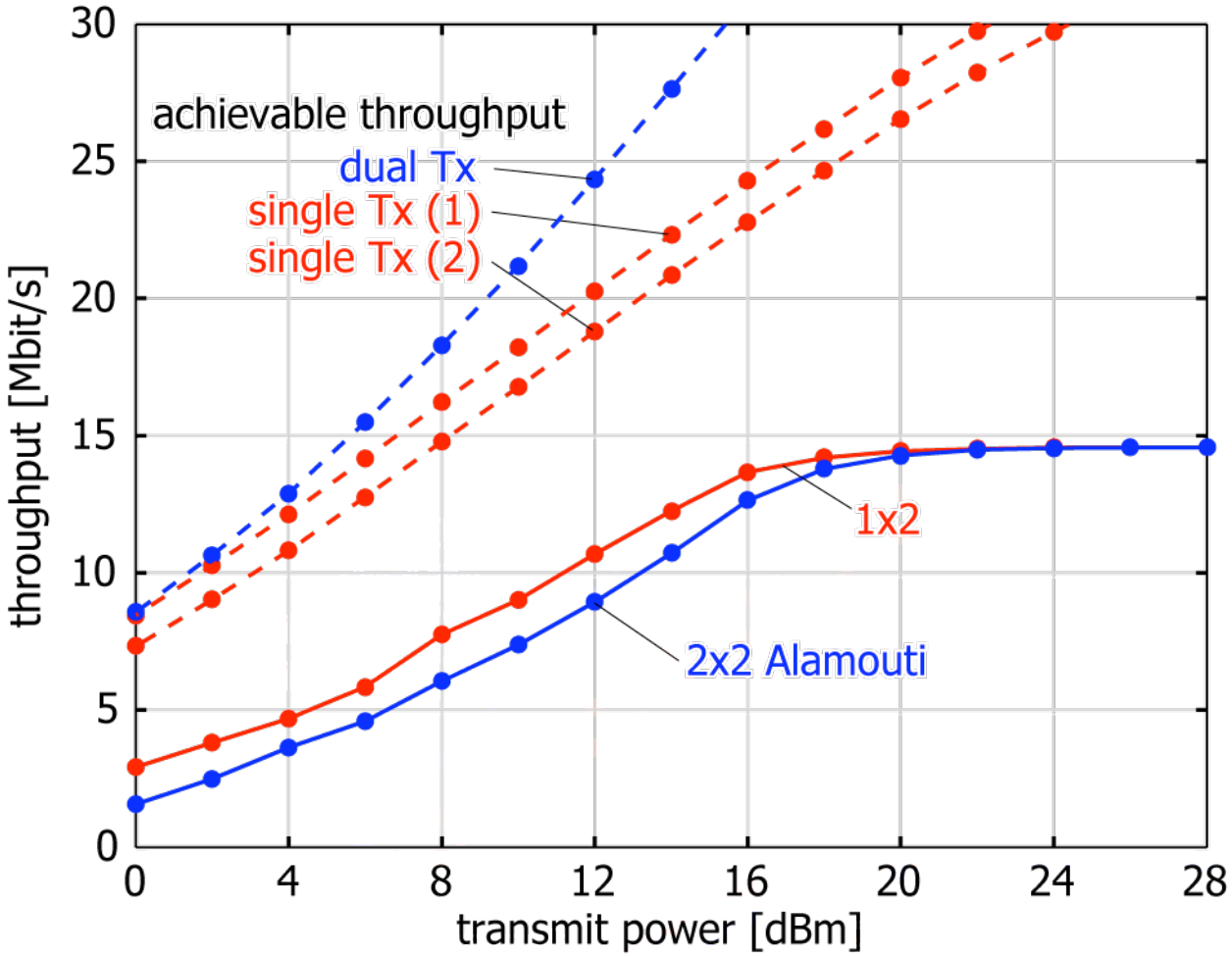

Two Receive Antennas: LOS outdoor-to-indoor [W2]

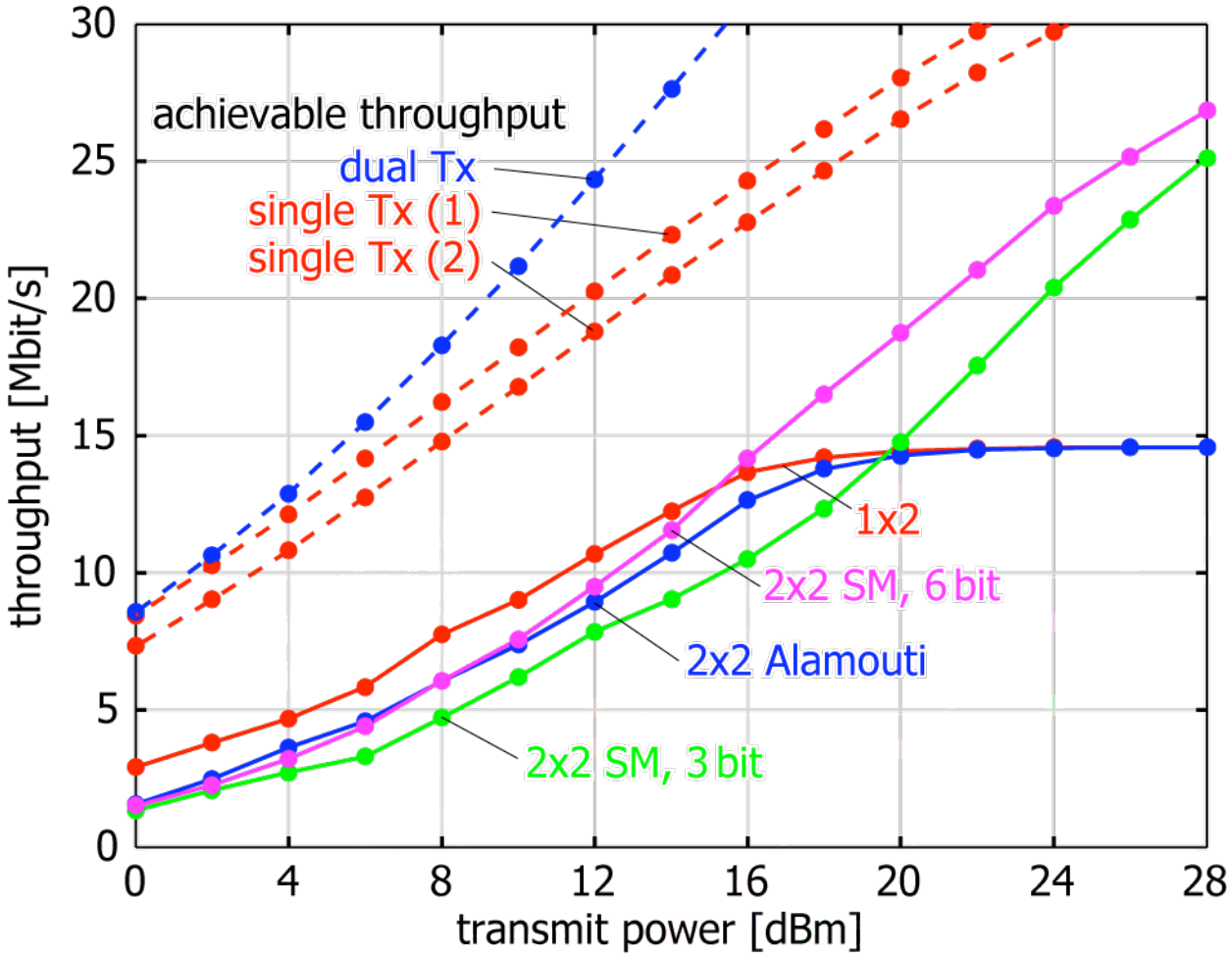

Two Receive Antennas: LOS outdoor-to-indoor [W2]

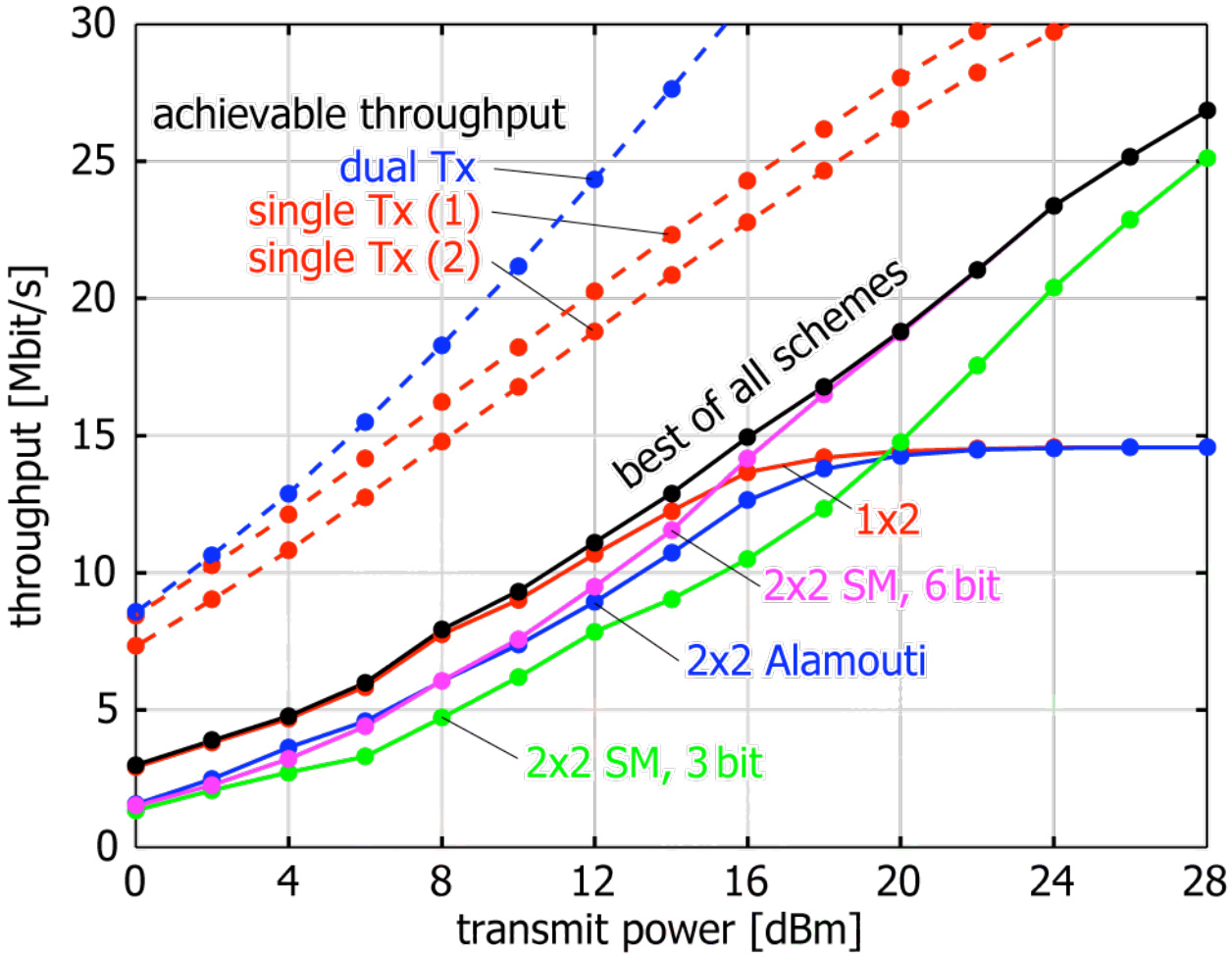

Two Receive Antennas: Conclusions [W2]

- Spatial multiplexing with 6 bit feedback outperforms spatial multiplexing with 3 bit feedback
  - The 6 bit feedback allows to exploit the asymmetric channels
- Alamouti is better than spatial multiplexing with 3 bit feedback due to transmit diversity
- Still, a huge gap of >10 dB between measured and achievable throughput is observed!

- Enhancements
  - Better channel coding
    - e.g. Low Density Parity Check (LDPC) codes
  - Enhanced channel estimation techniques
    - e.g. LMMSE channel estimation to exploit correlation between subcarriers

AWGN Performance of the Reed Solomon-Conv.Coder

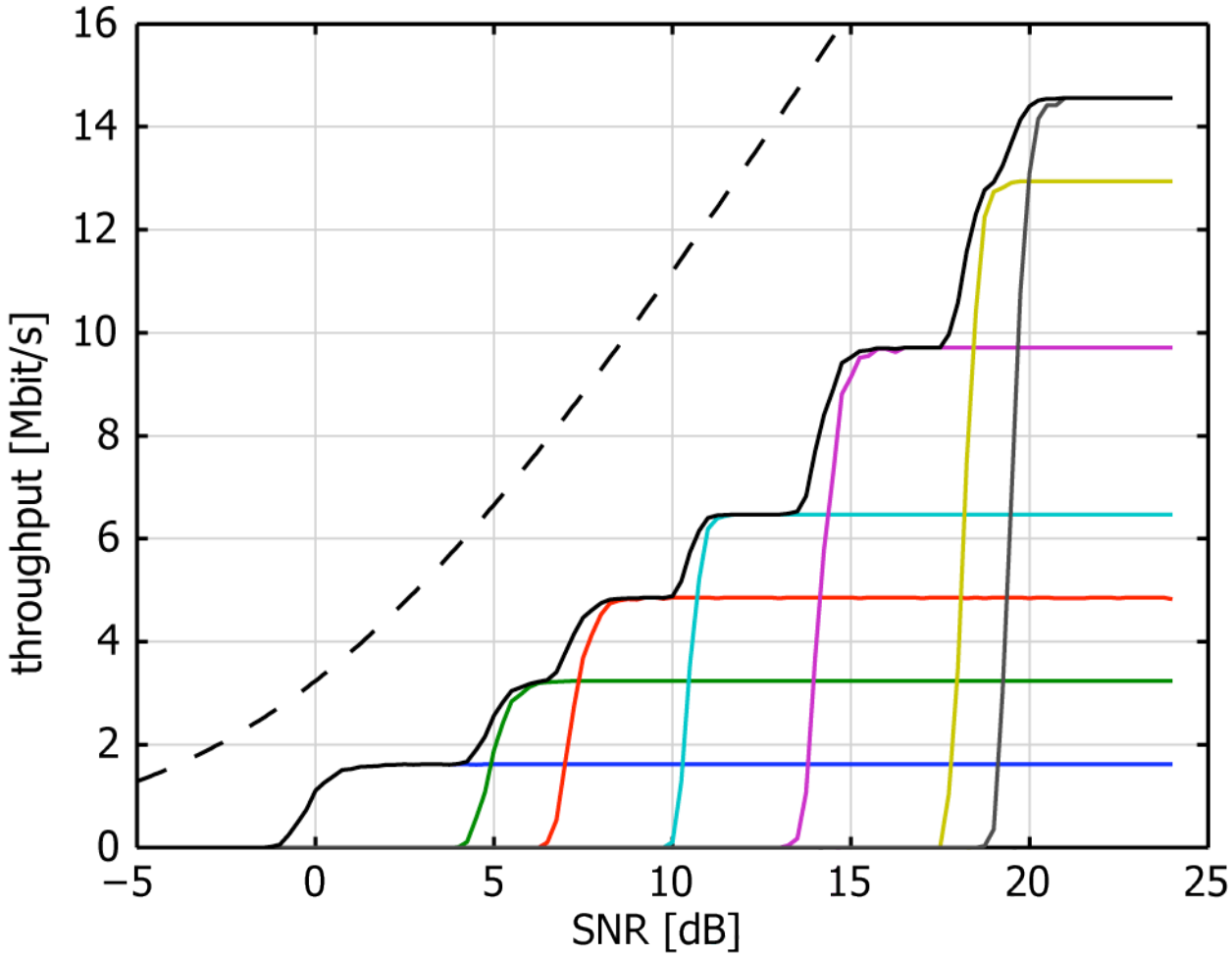

AWGN Performance of LDPC codes

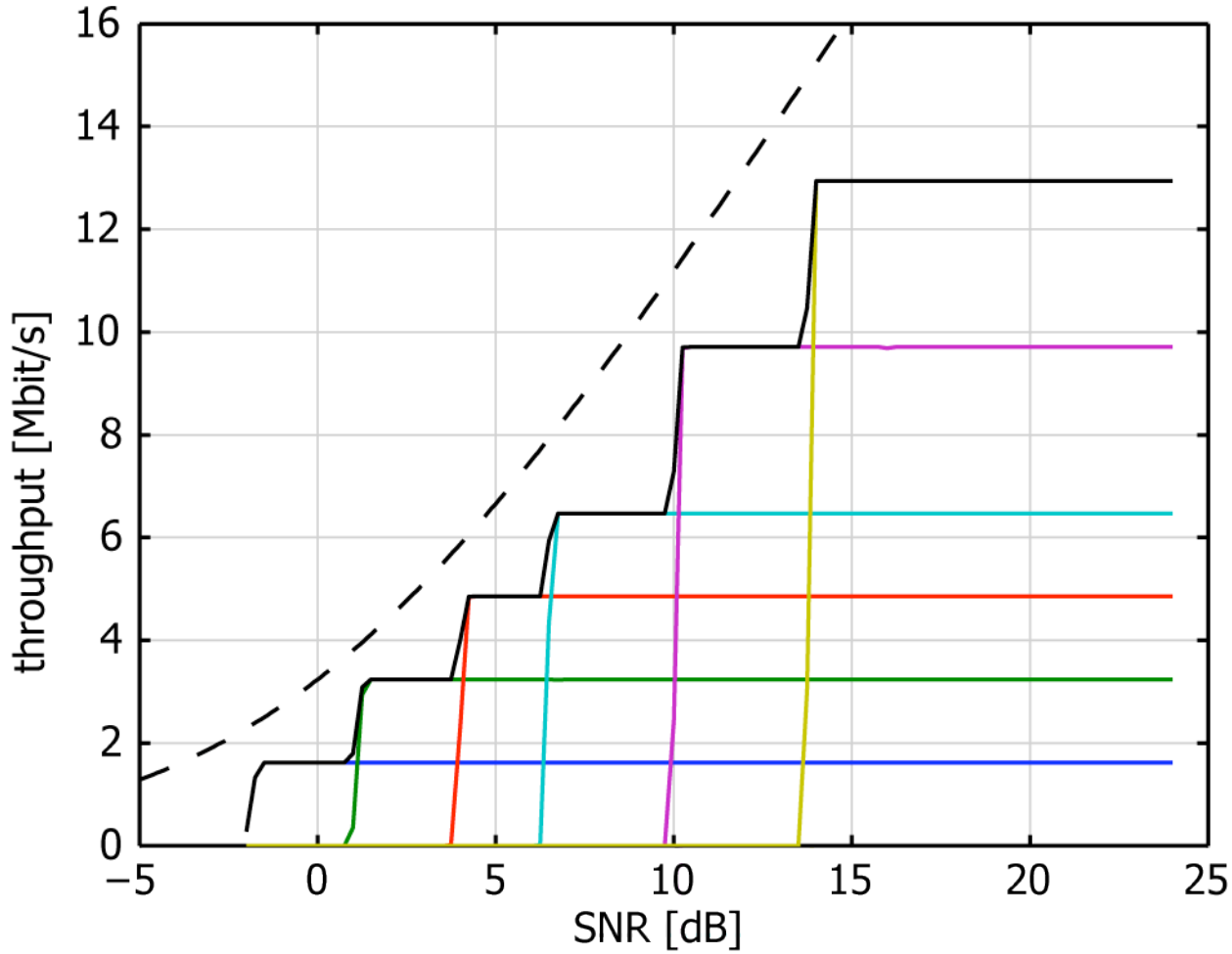

SNR Gain of Improved Channel Estimators over the LS Estimator [W1]

Scenario 1	LMMSE	genie-driven
1x1 SISO	0.6 dB	1.2 dB
2x1 Alamouti	1.8 dB	2.9 dB
1x2 SIMO	0.5 dB	1.2 dB
2x2 Alamouti	1.9 dB	3.2 dB
2x2 Spatial Multiplexing (3 bit)	1.4 dB	2.4 dB
2x2 Spatial Multiplexing (6 bit)	1.1 dB	2.2 dB

Outline

- MIMO Testbed
- WiMAX Measurements
  - signal generation and reception
  - IEEE 802.16-2004 (Section 8.3) with OFDM physical layer
  - feedback realization
  - achievable and measured throughput
- HSDPA Measurements
  - signal generation and reception
  - feedback realization
  - achievable and measured throughput
- Conclusion

HSDPA Overview

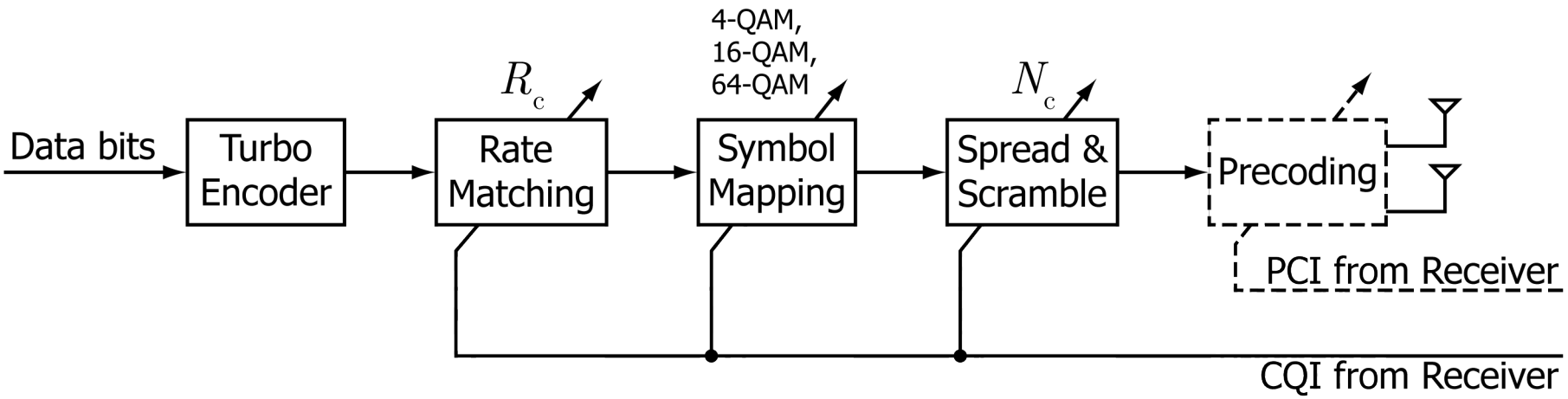

- Channel adaptation is performed by means of
  - a Channel Quality Indicator (CQI) and
  - a Precoding Control Indicator (PCI) when two transmit antennas are available

Transmission Timing [H4]

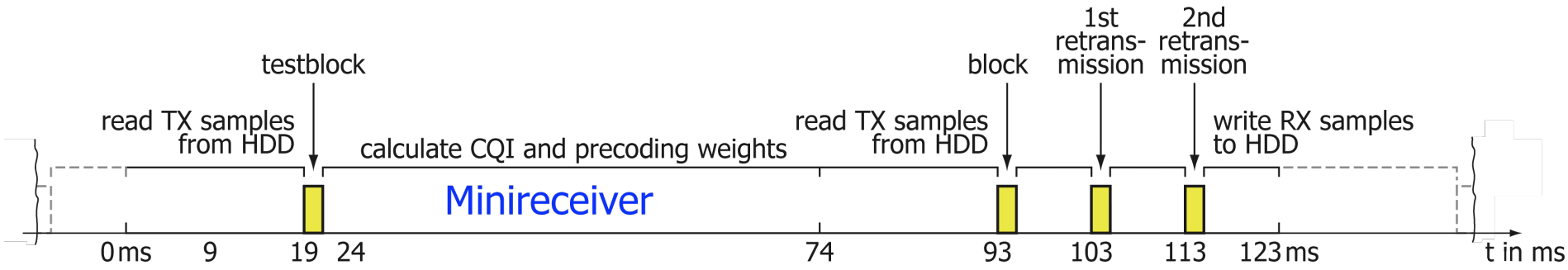

- Large number of possible transmit blocks require channel evaluation at the receiver
- Minireceiver estimates channel and noise and calculates the CQI and PCI

SINR Estimation in Minireceiver [H5]

$$\mathrm{SINR}_{\mathrm{est}} = \frac{P_s}{\sigma_{n'}^2 + P_{\mathrm{ISI}} + P_{\mathrm{INT}}}$$

The post equalization SINR is given by

- the signal power P_s
- the noise at the output of the equalizer $\sigma_{n'}^2$
- the remaining inter-symbol interference P_{ISI}
- the interference caused by spatially multiplexed streams sharing the same scrambling and spreading codes P_{INT}

SINR is calculated for all possible precoding vectors and mapped to the supported CQI values. The precoding vector maximizing the transport block size is selected.

Verification of the SINR Estimation in the Simulation [H5]

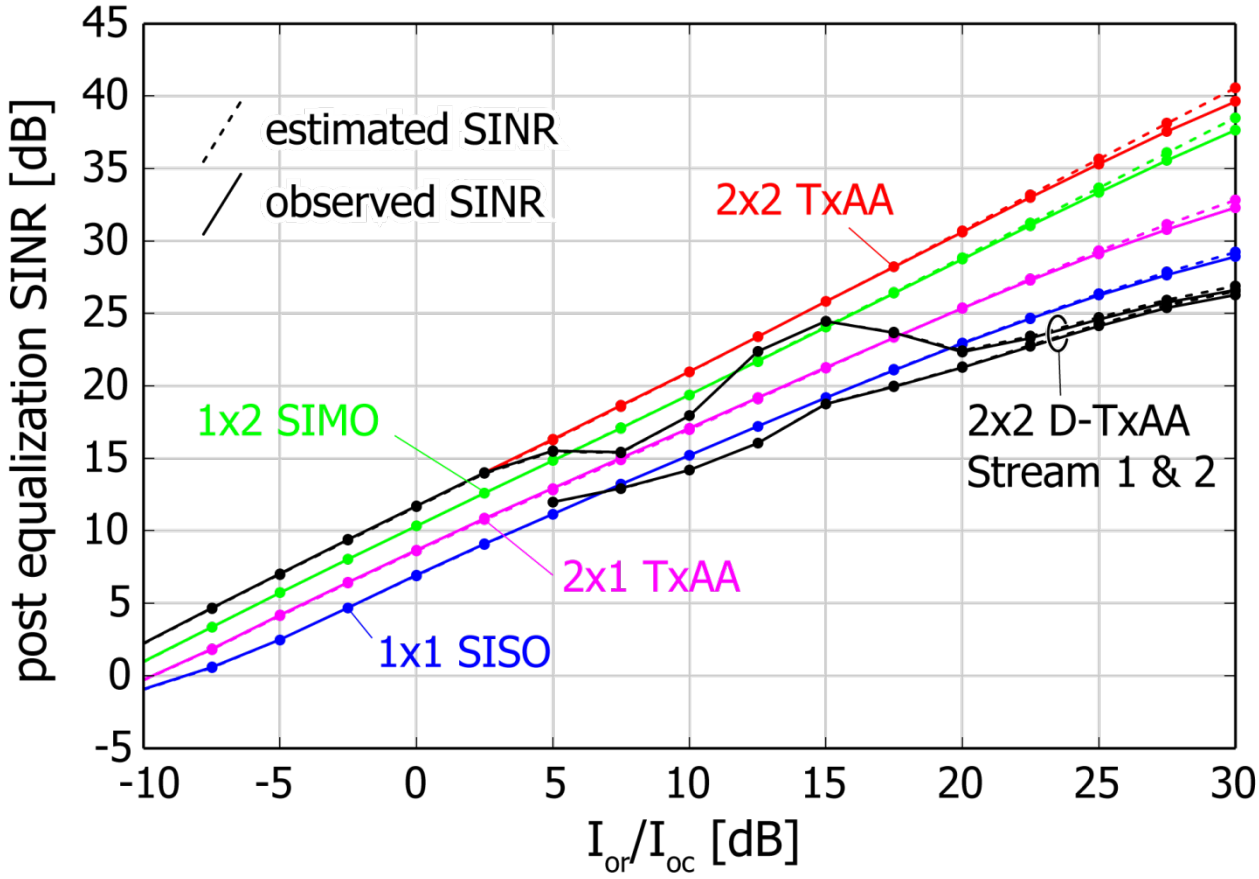

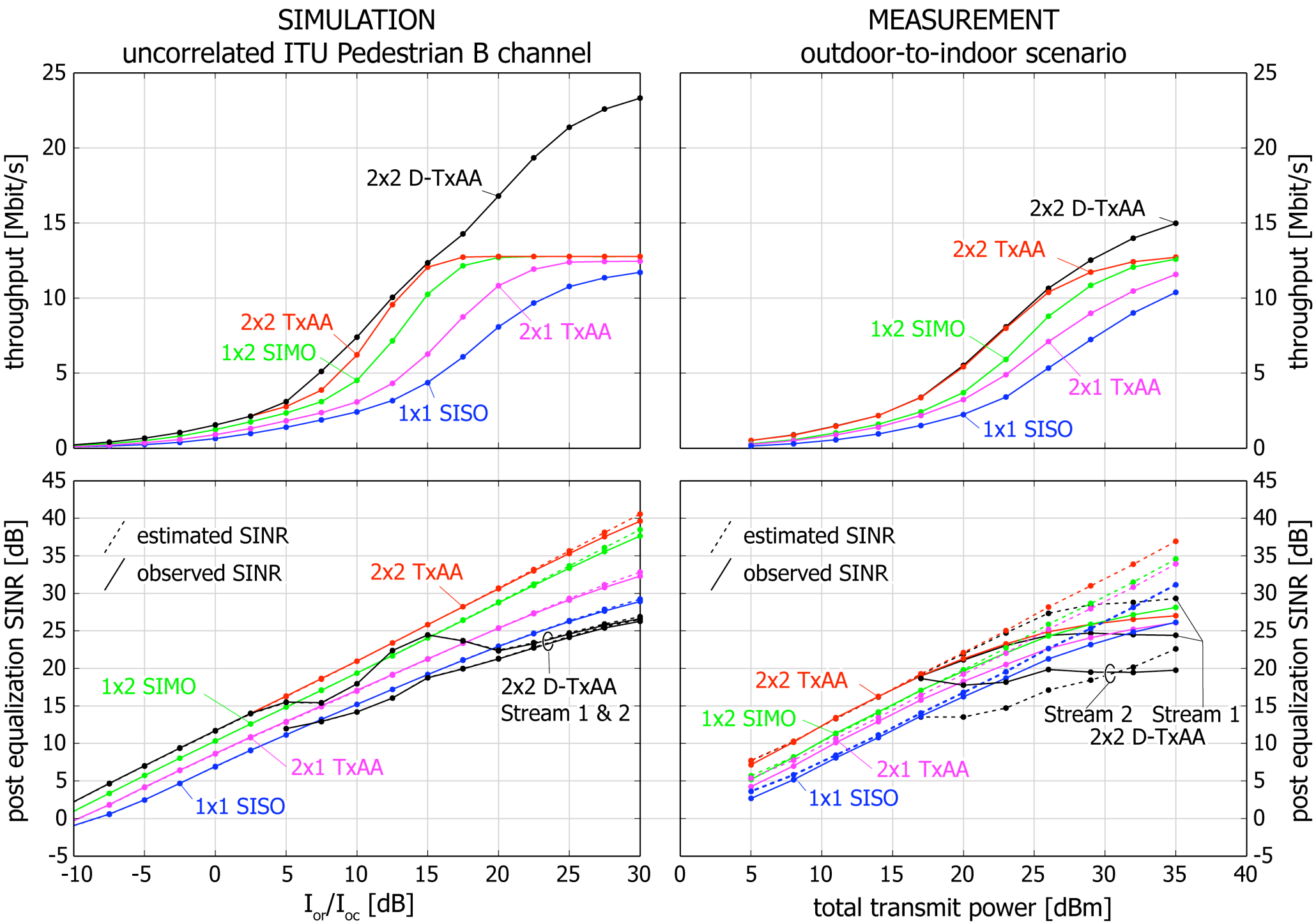
SIMULATION
uncorrelated ITU Pedestrian B channel
MEASUREMENT
outdoor-to-indoor scenario
throughput [Mbit/s]
post equalization SINR [dB]
2x2 D-TxAA
2x2 TxAA
1x2 SIMO
2x1 TxAA
1x1 SISO
estimated SINR
observed SINR
2x2 D-TxAA
Stream 1 & 2
Stream 2
Stream 1
I_{or}/I_{oc} [dB]
total transmit power [dBm]

Conclusion

- WiMAX suffers from inferior channel coding
  - 5dB can be gained in SNR by using an out-of-the-box LDPC code
  - Before deploying MIMO in WiMAX systems one should consider using advanced channel coding schemes
- Channel estimation is a key issue for MIMO WiMAX
  - Enhanced channel estimators can easily gain ~2 dB in the case of 2x2 Alamouti transmission
- SINR metrics used in HSDPA system simulations do not consider a saturation at high SINR.
  - Refined SINR metrics are required to increase the accuracy of system simulations.

Thank you for your attention.

http://www.nt.tuwien.ac.at/

Testbed References

[T1] Sebastian Caban, Christian Mehlführer, Robert Langwieser, Arpad L. Scholtz, Markus Rupp, "**Vienna MIMO Testbed**," in *EURASIP JASP Special Issue on Implementation Aspects and Testbeds for MIMO Systems,* Vol. 2006, Article ID 54868 (2006), http://publik.tuwien.ac.at/files/pub-et_10929.pdf.

[T2] Markus Rupp, Christian Mehlführer, Sebastian Caban, Robert Langwieser, Lukas W. Mayer, Arpad L. Scholtz, "**Testbeds and Rapid Prototyping in Wireless System Design**," in *EURASIP Newsletter,* 17 (2006), pp. 32-50, http://publik.tuwien.ac.at/files/pub-et_11232.pdf.

[T3] Thomas Kaiser, Andreas Wilzeck, Martin Berentsen, Markus Rupp, "**Prototyping for MIMO Systems - an Overview,"** in Proc. 12th European Signal Processing Conference (EUSIPCO 2004), Vienna, Austria, pp. 681-688, Sept. 2004, http://publik.tuwien.ac.at/files/pub-et_8809.pdf.

[T4] Markus Rupp, Andreas Burg, Eric Beck, "**Rapid prototyping for wireless designs: the five-ones approach,"** in Signal Processing, vol. 83, Issue 7, pp. 1427-1444, July 2003, http://publik.tuwien.ac.at/files/pub-et_7159.pdf.

HSDPA References

[H1] Dagmar Bosanska, Christian Mehlführer, Markus Rupp, "**Performance Evaluation of Intra-cell Interference Cancelation in D-TxAA HSDPA**," in Proc. International ITG Workshop on Smart Antennas (WSA 2008), Darmstadt, Germany, Feb. 2008, http://publik.tuwien.ac.at/files/pub-et_13677.pdf.

[H2] Martin Wrulich, Christian Mehlführer, Markus Rupp, "**Interference Aware MMSE Equalization for MIMO TxAA**," in Proc. International Symposium on Communications, Control, and Signal Processing 2008 (ISCCSP 2008) , pp. 1585-1589, St. Julians, Malta, Mar. 2008, http://publik.tuwien.ac.at/files/pub-et_13657.pdf.

[H3] Christian Mehlführer, Martin Wrulich, Markus Rupp, "**Intra-cell Interference Aware Equalization for TxAA HSDPA**," in Proc. IEEE International Symposium on Wireless Pervasive Computing (ISWPC 2008), pp. 406-409, Santorini Greece, http://publik.tuwien.ac.at/files/pub-et_13749.pdf.

[H4] Christian Mehlführer, Sebastian Caban, Markus Rupp, "**Measurement based evaluation of low complexity receivers for D-TxAA HSDPA**," in Proc. 16th European Signal Processing Conference (EUSIPCO 2008), Lausanne, Switzerland, Aug. 2008.

[H5] Christian Mehlführer, Sebastian Caban, Martin Wrulich, and Markus Rupp, "**Joint Throughput Optimized CQI and Precoding Weight Calculation for MIMO HSDPA**," submitted to 42nd Asilomar Conference on Signals, Systems and Computers, 2008, Pacific Grove, CA, USA, Oct. 2008.

[H6] Christian Mehlführer, Markus Rupp, "**Novel Tap-wise LMMSE channel estimation for MIMO W-CDMA**," submitted to 51st Annual IEEE Globecom Conference 2008, New Orleans, LA, USA, Nov. 2008, submitted.

WiMAX References

[W1] Christian Mehlführer, Sebastian Caban, Markus Rupp, "**An Accurate and Low Complex Channel Estimator for OFDM WiMAX**," in Proc. International Symposium on Communications, Control, and Signal Processing 2008, pp. 922–926, St. Julians, Malta, Mar. 2008, http://publik.tuwien.ac.at/files/pub-et_13650.pdf.

[W2] Christian Mehlführer, Sebastian Caban, Markus Rupp, "**Experimental Evaluation of Adaptive Modulation and Coding in MIMO WiMAX with Limited Feedback**," in *EURASIP JASP Special Issue on MIMO Transmission with Limited Feedback,* Vol. 2008, Article ID 837102 (2008), http://publik.tuwien.ac.at/files/pub-et_13762.pdf