Quantitative Study of Process and Material Parameters on Flow Behavior and Powder Binder Separation of Feedstocks: Experimental Design 3D Simulation Model and Balance Model for Separation in Suspensions

Martin Jenni (1), Rudolf Zauner (2) Juergen Stampfl (3) and Jeff Morris (4)

(1) Austrian Research Centers GmbH – ARC, A-2444 Seibersdorf, Austria
(2) Verbund – Austrian Renewable Power GmbH, A-1010 Wien, Austria
(3) Vienna University of Technology, Institute of Materials Science and Technology, A-1040 Vienna, Austria
(4) City College New York, Chemical Engineering, NY 10031 New York, USA

ABSTRACT

The rheological properties of feedstocks and their flow ability and tendency for powder binder separation have a strong influence on the successful manufacturing of PIM components. The goal of this work is therefore to identify the most significant materials and processing parameters for these effects. Additionally, the sensitivity of the flow behavior and powder binder separation on these parameters is studied. A systematic comparison of the filling behavior of different tungsten and aluminum feedstocks has been carried out experimentally and compared with 3-D-simulation results using the CAE software Moldex3D. Using a specially designed spiral flow mold, designed experiments (DOE) with variations in the nozzle temperature, mold temperature an injection speed of feedstocks with extremely different physical and thermal properties (tungsten and aluminum) were carried out. The results were statistically analyzed and compared with the predictions from simulation. The observed effects are explained and implications for optimized PIM processing are suggested. Furthermore parts of the samples are analyzed for powder separation and compared to predictions made by the balance model by Miller and Morris 2003.

INTRODUCTION

Powder injection molding (PIM) is a relatively new processing technology used in powder metallurgy and ceramic processing industries. This process is especially cost-effective and beneficial for manufacturing small and complex components in large quantities. Powder injection molding is used in an increasing range of different fields, including automotive, medical and telecommunications industries. It includes four basic steps consisting of mixing the powders and binders, injection molding, debinding and finally sintering [1]. Both injection molding and sintering are the most important steps related to forming the green part and the final part, respectively. In particularly the injection step often requires expensive and time consuming trial and error methods to resolve design problems associated with raw material, product dimensions, tooling factors and process issues during manufacturing. A direct relationship between input and output parameters is often not obvious and a lot of testing is needed to find empirical relationships for the influence of feedstock properties, processing conditions and mould properties on the mold filling

behavior. Today's computer aided engineering tools for plastic injection molding and PIM have shown promising results in resolving problems of material, part and mold design.

Similar to injection molding of thermoplastic feedstocks, defects such as jetting, air traps, dead zones, or welding lines can also occur in PIM. A~~The a~~vailable software packages are addressing these points already. However, the powder binder separation, also called phase segregation, is a phenomenon which occurs in PIM and happens during the high speed and high pressure injection molding process due to the different densities associated to powder and binders. These can induce inhomogeneities of green parts. After the debinding step, the binder is removed and the remaining component results in a porous brown part. In the consecutive sintering step, the debinded parts shrink substantially. The shrinkage between the green component and resulting net component is typically in the range of 10 to 20% and the final density in the range of 95 to 100% [2]. After sintering some finishing operations may be needed. The tolerances of PIM components are in th range of 0,3 to 0,4%, which is high compared with the tolerances achieved by other near net shape technologies [3] and which are small considering the substantial shrinkage from green to sintered dimensions. Therefore it is essential to control defects such as inhomogenous shrinkage, distortions, cracks, etc to get the final components with the required dimensional accuracy and specified mechanical properties.

The conventional trial and error methods are widely used in the PIM industries to obtain the required products by adapting and adjusting tooling and processing parameters iteratively. The numerical simulation for PIM is now in development and promises a cost-effective tool to optimize the process and avoid the trial and error approach. Often thermoplastic injection molding software is used as a base for modeling the process from feedstock to green part. These "plastic injection software" tools do not address PIM-specific problems like the powder density distribution of the green part.

In this paper, the main focus will be on the powder and binder separation of the PIM injection molding process, because of its importance for the following sintering process. Therefore the influence of injection parameters for different materials on the process and resulting separation is discussed. In a next step the experiments are carried out with the injection simulation software MOLDEX3D. For the comparison of the simulation and real experiments the flow length in specially designed characterization molds is used as a quantitative parameter. Because of the lack of a powder binder separation model in MOLDEX3D, alternative simulation approaches were investigated to make predictions on the separation behavior of PIM parts. Furthermore calculations with the Balance Model for Separation of Suspension which includes a powder binder separation model were carried out and compared to the real parts to check the quality of the results.

EXPERIMENTAL INVESTIGATION

With the main focus on the powder binder separation, first a procedure to quantify the local powder content had to be found. The method had to be simple and fast because of the large number of samples that were expected. Different approaches were tried and in the end the measurement with a differential scanning calorimeter (DSC) worked out best.

To compare different materials and processing parameters, three characterization molds are produced. These characterization molds were designed in a way to exaggerate powder-binder separation. Molds used to test the moldability of plastics are similar in design.

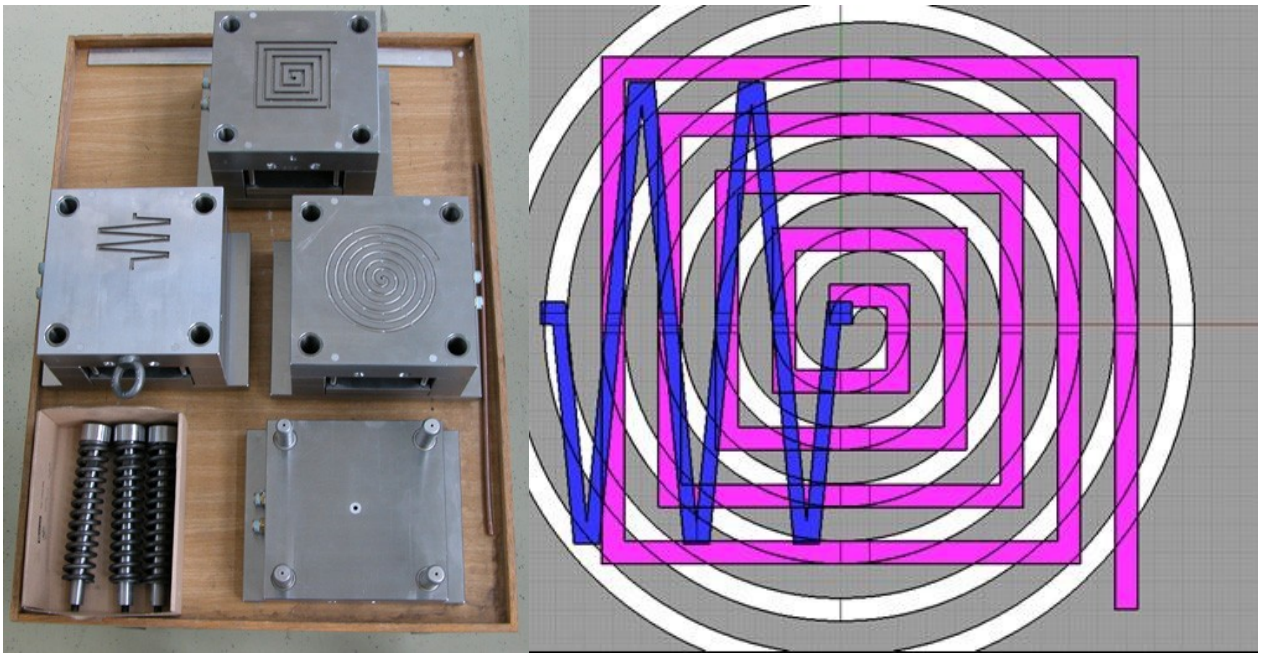

Figure 1. Characterization molds; three different forms called spiral (white), square spiral (pink) and zigzag (blue)

Moldability is expressed as the length of the characterization mold filled under a set of conditions. Because the mold is cold, a frozen layer continuously forms along the mold wall. This means that continued filling of the mold depends on the flow through the partially frozen channel. The process is termed fountain flow. As heat is extracted through the walls, the center channel progressively closes and eventually halts flow [4]. This moldability test shows good results for plastic injection, however, the predictions for PIM feedstocks are difficult. Near the critical solids loading, small changes in solid content have large effects on flow.

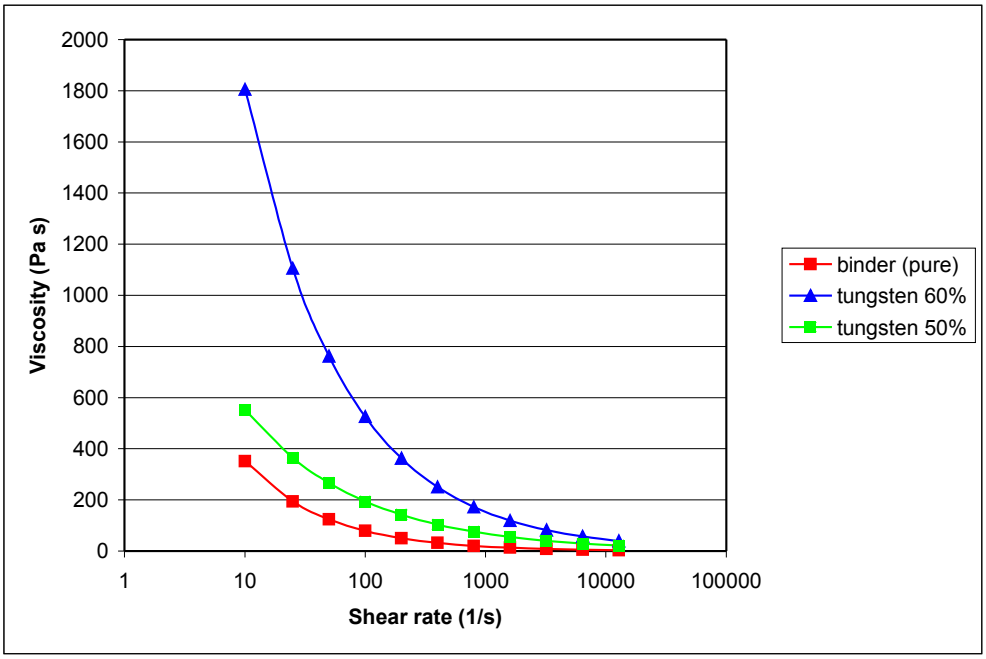

Figure 2. Viscosity measured with capillary rheometry for different loadings; material tungsten with ARCS binder

The experimental runs are performed the same way for all different materials to get comparable results. Furthermore the tests are build to fit a “Design of Experiments” approach to visualize the outcome. The dependent variable for the moldability is the flow length and the input variables are nozzle temperature, mold temperature and injection speed. Because of three variables at two values a full test (8 runs each session) was made. Tested materials are ARCS tungsten with 60% and 50% loading, BASF Catamold 17-4PH and Broell ceramics feedstock.

Initially, the standard conditions for the process were determined. The successful determination depends very much on the experience of the operator of the molding machine. After finding the perfect parameters, the variables are shifted up and down. After the first test a shifting of +/- 10 degree for nozzle and mold temperature and +/- 5 ccm/sec for injection speed are defined. More than +/- 10 degree shifting leads to cracks, overheating of the feedstock and general problems during ejection.

Table 1. Data sheet for DOE measurements; material: ARCS tungsten feedstock with 60% loading; mold: square spiral

number	nozzle temp.		mould temp.		injection speed		length of flow	
1	150	°C	50	°C	35	ccm/sec	246	mm
2	150	°C	50	°C	30	ccm/sec	239	mm
3	150	°C	40	°C	35	ccm/sec	235	mm
4	150	°C	40	°C	30	ccm/sec	230	mm
5	140	°C	50	°C	35	ccm/sec	240	mm
6	140	°C	50	°C	30	ccm/sec	227	mm
7	140	°C	40	°C	35	ccm/sec	236	mm
8	140	°C	40	°C	30	ccm/sec	222	mm

After performing the DOE for the above mentioned materials, the influence of the variables on the moldability is discussed. The feedstock behavior is as expected. Within the parameter window for good results, increasing temperature and energy (injection speed) leads to better flowability of the feedstock. Also the flow length for different loadings changes significantly. The mean difference for tungsten with 60% and 50% loading and square spiral is about mm or %.

Furthermore, not only the flow length but also the powder content at a defined location was measured for each sample. The third corner of the square spiral was horizontally sliced and resulted in a one millimeter thick L-geometry. Then a one millimeter wide bar is cut out from the inner corner to the outer corner. This bar is then divided in 5 parts and the number one, three and five is taken for measurements.

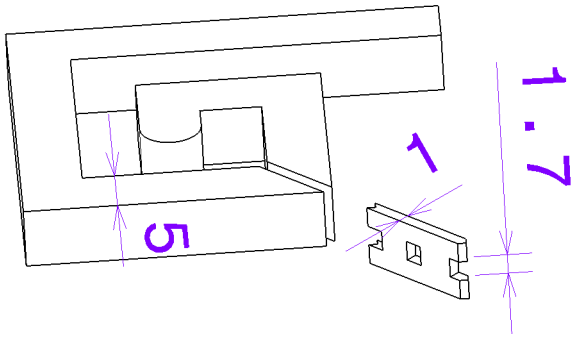

Figure 3. Position of samples for powder content measurements

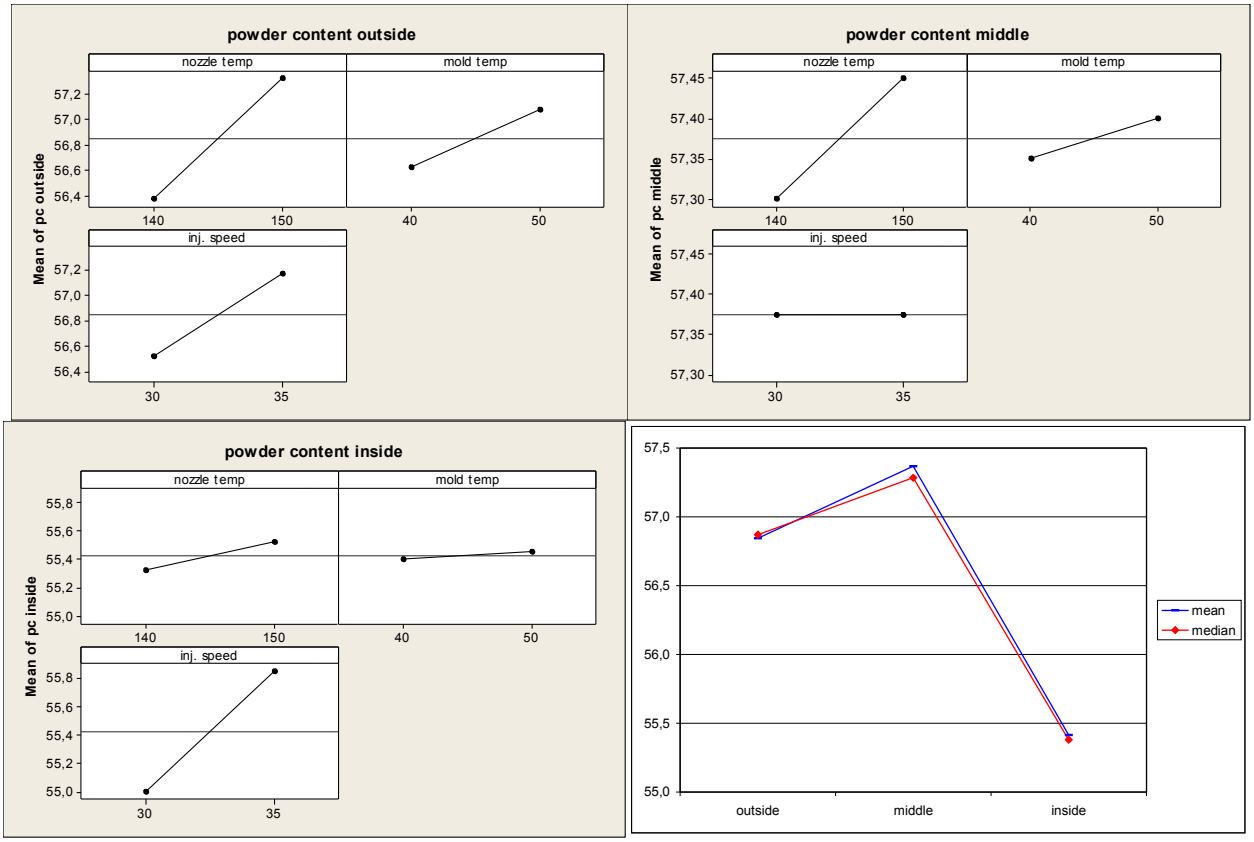

Figure 4. Influence of the nozzle, mold temperature and injection speed on the powder content; mean and median powder content over the experiment series

After a closer look at the results and comparison with other materials and powder loadings, the development of a fountain flow becomes more significant with higher temperature and speed. On the wall of the mold, the material freezes and the mold and feedstock temperature has a good influence on the powder content. Also the raising flow length and the little raise of the mean powder content at the third corner of the square spiral (constant distance from entrance) predict the fountain flow phenomenon. The binder is fluid and will therefore flow easier while the powder will follow behind. Therefore in a characterization mold like the square spiral the general powder content will sink somewhat with raising number of corners. Furthermore the small or non-influence of the injection speed on the powder content of the middle of the corner point at this fountain or channel flow. Also the higher mean and median powder content over a series of 8 runs support this behavior.

With main focus on the powder-binder separation, a feedstock with less variation of the moldability (flow length) by changes of temperatures gives better results. Also the induced energy by temperature and velocity should be as small as possible in the window of useful parameter settings for each feedstock.

MOLDEX3D

Moldex3D is a CAE (computer aided engineering) tool in injection molding. It is developed by CoreTech Systems in Taiwan. The company is a spin-off of the Technical University Taiwan in 1995, but is still working closely with the university, mainly in the areas of simulation and material characterization. Moldex3D has about 130 staff members with 65 developers and 1200 customer with over 3000 industrial projects worldwide.

Because of the true 3D model simulation Moldex3D is good suitable for PIM simulation. Furthermore Moldex3D include in the analysis the exact model of the mold. Like the other commercial simulation packages Moldex3D is also subjected to some limitations because PIM feedstock in this case must be assumed to be an isotropic homogenous fluid. For example, with such an assumption it will not be possible simulating the powder-binder segregation phenomena. However, this approach is justified because it allows simulating a number of other important parameters and help optimizing the entire PIM process [3]. The PIM feedstock needs to be defined as a new "polymer" or "metal", with certain properties. The material properties of Moldex3D include the rheological data (viscosity over the shear rate), pvT data, thermal conductivity and specific heat. This data was measured specifically for each material and put together in a material library for feedstocks.

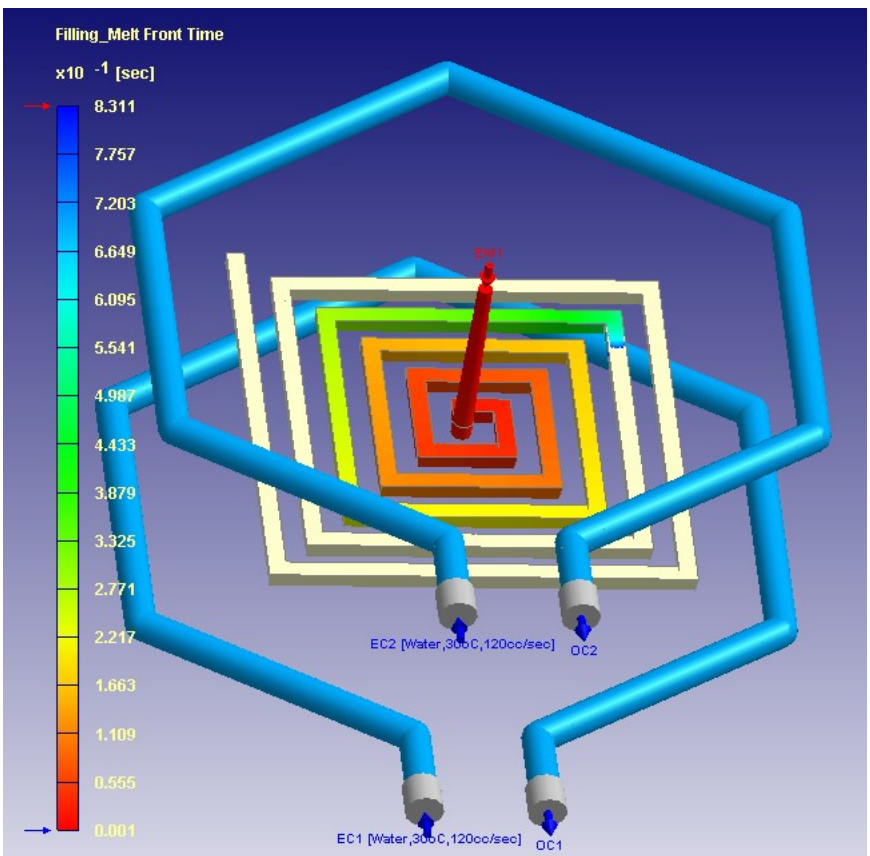

Figure 5. Filling simulation of a tungsten feedstock in the square spiral mold

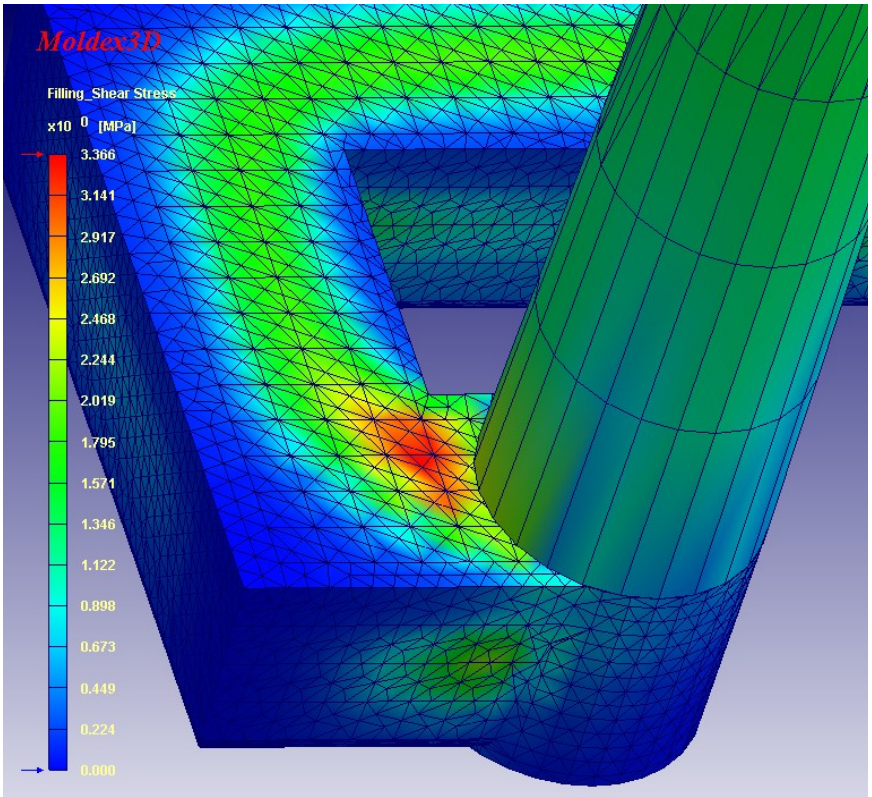

Figure 6. Simulation of the shear stress and demonstration of the mesh

As a full simulation package for injection molding Moldex3D is able to calculate filling, cooling, warping etc. Because of the assumed isotropic homogenous fluid similarities between present possible output data and measured powder content of significant location like the corner are searched.

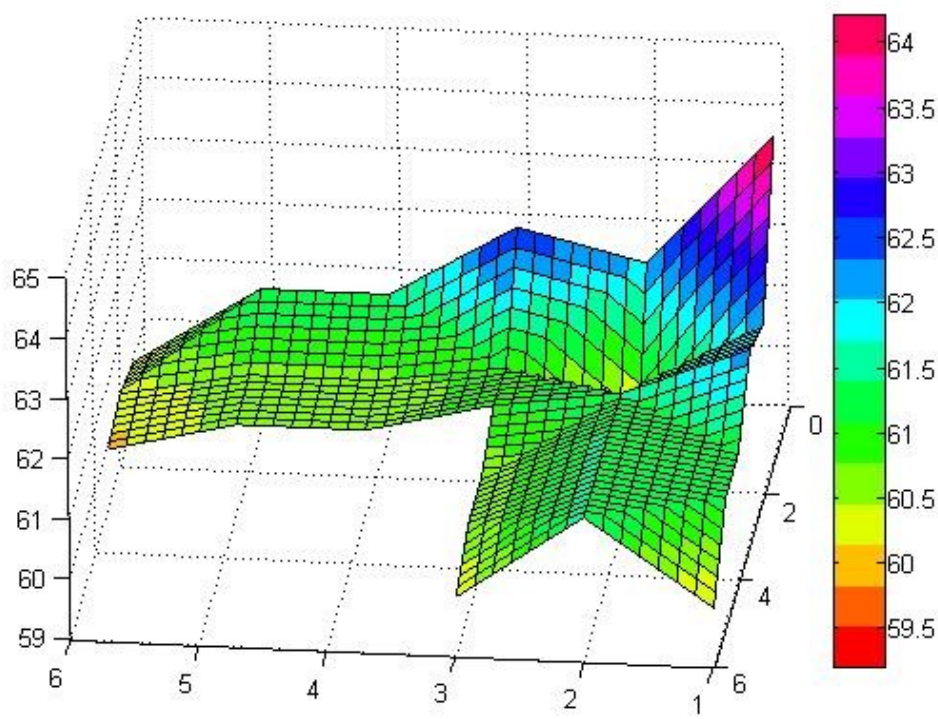

Figure 7. Powder content of a corner of the square spiral; measured with DSC

BALANCE MODEL

In reality PIM feedstock consist~~s~~ of two phases one of which (binder) undergoes phase transformation during the molding stage, while the other (powder) one remains solid. Besides that, properties of the constituents are different, the distribution of the powder in the binder may be distorted during the molding process. Efforts undertaken in modeling of specific PIM-related phenomena like the powder binder separation is based mainly on two physical models for suspension flows: Diffusive-flux model [5] and the suspension balance model [6-7]. Both models are continuum based models, in which the particle phase is approximated as a pseudo-continuum. Other methods of study like experimental investigation and particle tracking simulations provide valuable insight into specific systems, but are time consuming and the results are not easily generalized.

The used balance model is based on averaging the mass and momentum conservation equations over the particle phase to form a particle phase transport equation. This approach requires a constitutive model for the particle phase stress, which drives migration through the particle migration flux. The form of the constitutive model is based on rheological theory and experiment and contains experimentally accessible quantities such as stress and shear rate. For predictions of migration in curvilinear flows an anisotropic particle phase pressure and normal stress difference are used.

The governing equations are established for the flow of suspensions of rigid, spherical particles in a Newtonian fluid. Viscous conditions and non-Brownian particles with no external field effects except gravity are assumed. This result in hydrodynamics as the dominant interaction between the particles. The Reynolds number is sufficiently small that bulk inertia has little influence. For the suspended particle phase, the particle radius is small enough to allow the continuum description. The particle Reynolds number is also assumed to be vanishing small.

More information about the balance model are found in works of Jeff Morris and Ryan Miller [6-7].

For testing the balance model a program named solver evolver was introduced. This code is written in Matlab and very basic and general approach. Rheological data of the tungsten ~~material~~feedstock was measured and implemented into the Solver-Evolver. Nowadays only simple two dimensional geometries are possible.

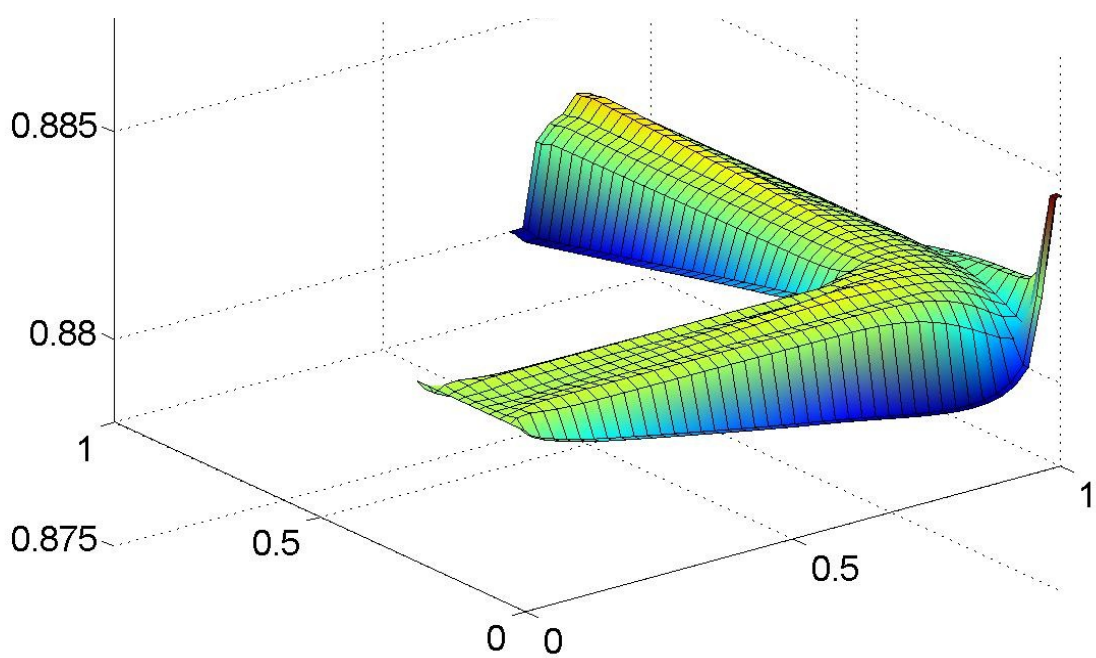

Figure 8. Powder content of a corner calculated by the solver evolver with tungsten feedstock 60% loading

CONCLUSION

To address the powder dissemination or powder binder separation a few ideas are shown. The process itself can be optimized with reducing the temperatures and speeds to the feedstock limits. Furthermore a feedstock with little moldability changes in the processing parameter window and parameter values, in special the temperatures, shows less powder binder separation. So a feedstock with a rapid change between firm and molten is a big advantage.

Simulations software like Moldex3D shows a quality picture of the filling process and is a good instrument to find problem locations. Absolute numbers are not accurate for further investigations when PIM materials are used, which have a behavior often way of thermoplastics.

The Nott – Brady – Miller approach for separation of suspensions is a good start into powder binder separation. The code allows a good picture for migration of particles in basic geometries. Problems are the shear thinning of a feedstock and the "fountain flow", which is not addressed by the code. But at least one of the biggest advantages is the possibility of the third dimension.

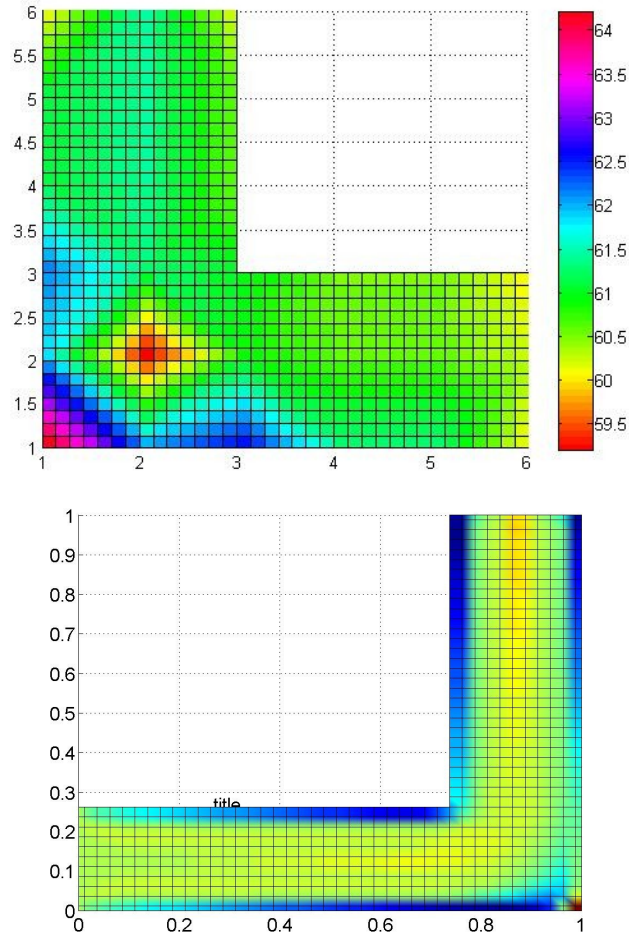

Figure 9. Search for similarities – measured powder content, shear stress by Moldex3D, calculated powder distribution by the Solver-Evolver

References

[1] S. V. Atre, S.-J. Park, R. Zauner, R.M. German, "Process simulation fo powder injection moulding: identification of significant parameters during mould filling phase", 2006, Powder Metallurgy, vol. 49, no. 3.

[2] J.C. Gelin, Th. Barriere, J. Song, "Processing defects and resulting mechanical properties after metal injection molding", 2007, FEMTO-ST Institute, Department of Applied Mechanics, ENSMM Besançon, France.

[3] V. V. Bilovol, "Mould filling simulations during powder injection moulding", 2003, PH.D. Thesis, Delft University of Technology, Delft, The Netherlands.

[4] Randall M. German, Animesh Bose, "Injection Molding of Metals and Ceramics", 1997, Metal Powder Industries Federation, Princeton, New Jersey.

[5] Ronald J. Phillips, Robert C. Armstrong, Robert A. Brown, Alan L. Graham, James R. Abbott, "A constitutive equation for concentrated suspensions that accounts for shear-induced particle migration", 1992, Phys Fluid A, vol. 4, pp. 30-40.

[6] Ryan M. Miller, "Continuum Modeling of Liquid-Solid Suspensions for Nonviscometric Flows", 2004 PH.D. Thesis, School of Chemical & Biomolecular Engineering, Georgia Institute of Technology, Atlanta, Georgia.

[7] Jeffrey F. Morris, Fabienne Boulay, "Curvilinear flows of noncolloidal suspensions: The role of normal stresses", 1999, J. Rheol. 43(5), pp. 1213-1237.