Strategies and Measures for Promoting MFA applications for RM and EM in Industries

Paul H. Brunner
Vienna University of Technology
Institute for Water Quality, Resources and Waste Management
http://www.iwa.tuwien.ac.at

Incentives for industry to use MFA

1. **Direct economic benefit**
2. **Comparative advantage in a competitive market**
3. **Leadership**
4. **Regulations**
5. **Improve knowledge base**

No incentive:

MFA studies "per se" without economic or problem solving purpose

1. Economic benefits: MFA and greenhouse gas emission assessment

Concept of Balance Method

Material data of waste input
Biogenic matter C, H, O, N, S, Cl
Fossil matter C, H, O, N, S, Cl

Balance equations

$$m_B + m_F + m_I + m_W = 1$$

$$m_I = a_{waste}$$

$$c_B \cdot m_B + c_F \cdot m_F = c_{waste}$$

$$HV_B \cdot m_B + HV_F \cdot m_F - 2.45 \cdot m_W = HV_{waste}$$

$$O_2^c{}_B \cdot m_B + O_2^c{}_F \cdot m_F = O_2^c{}_{waste}$$

$$d_{O2\text{-}CO2} \cdot m_B + d_{O2\text{-}CO2} \cdot m_F = d_{O2\text{-}CO2,waste}$$

Operating data from WTE plant
Waste input, flue gas volume, CO2, O2, steam production

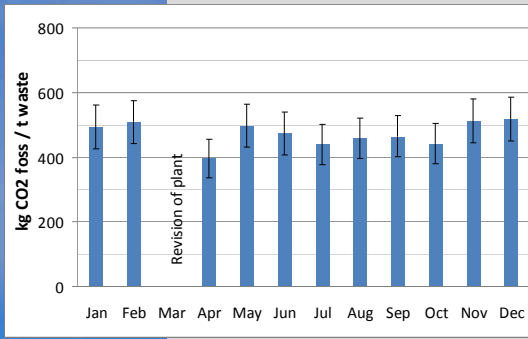

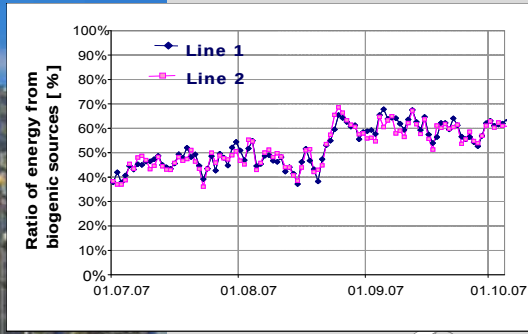

Balance Equation

Mass balance	$m_B + m_F + m_I + m_W$	$= 1$
"Ash"-balance	m_I	$= a_{waste}$
Carbon-balance	$c_B \cdot m_B + c_F \cdot m_F$	$= c_{waste}$
Energy-balance	$HV_B \cdot m_B + HV_F \cdot m_F - 2.45 \cdot m_W$	$= HV_{waste}$
O_2-consumption	$O_2{}^C{}_{,B} \cdot m_B + O_2{}^C{}_{,F} \cdot m_F$	$= O_2{}^C{}_{waste}$
Difference of O_2-cons. +CO_2-prod.	$d_{O_2\text{-}CO_2} \cdot m_B + d_{O_2\text{-}CO_2} \cdot m_F$	$= d_{O_2\text{-}CO_2,waste}$

Coefficients ***(given by the chemical composition of biogenic and fossil matter)***

Derived from operating data

Results (annual values)

sources of CO_2 - emissions

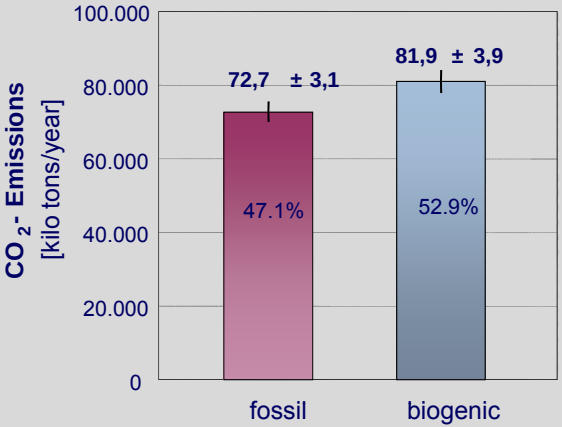

sources of energy

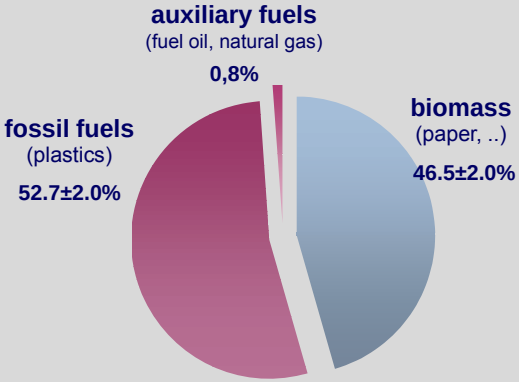

Comparison with radiocarbon method

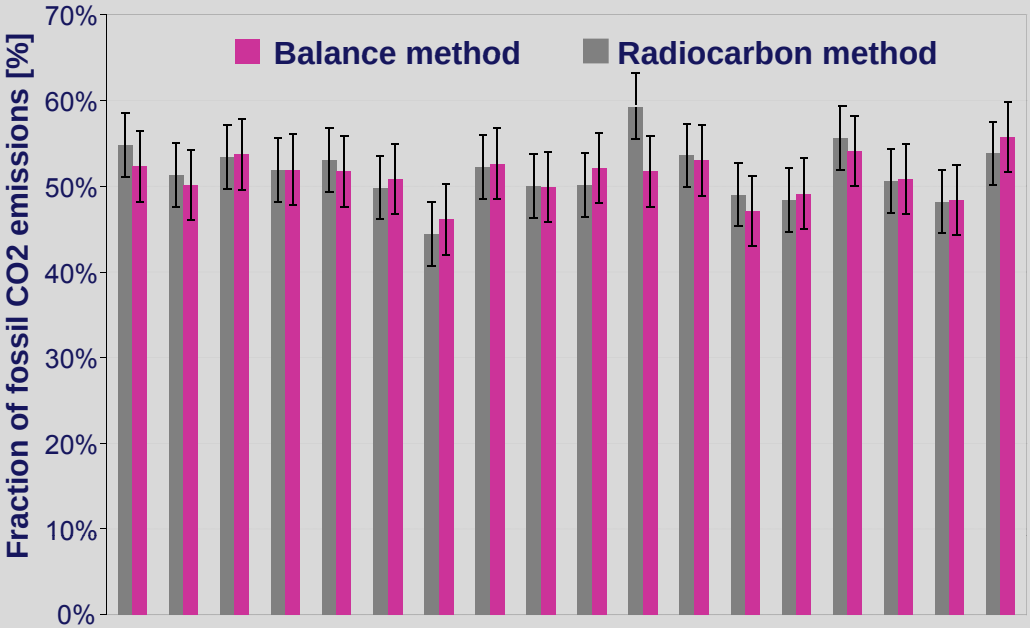

Fellner et al, 2007

2. Comparative advantage in a competitive market (V.EFB)

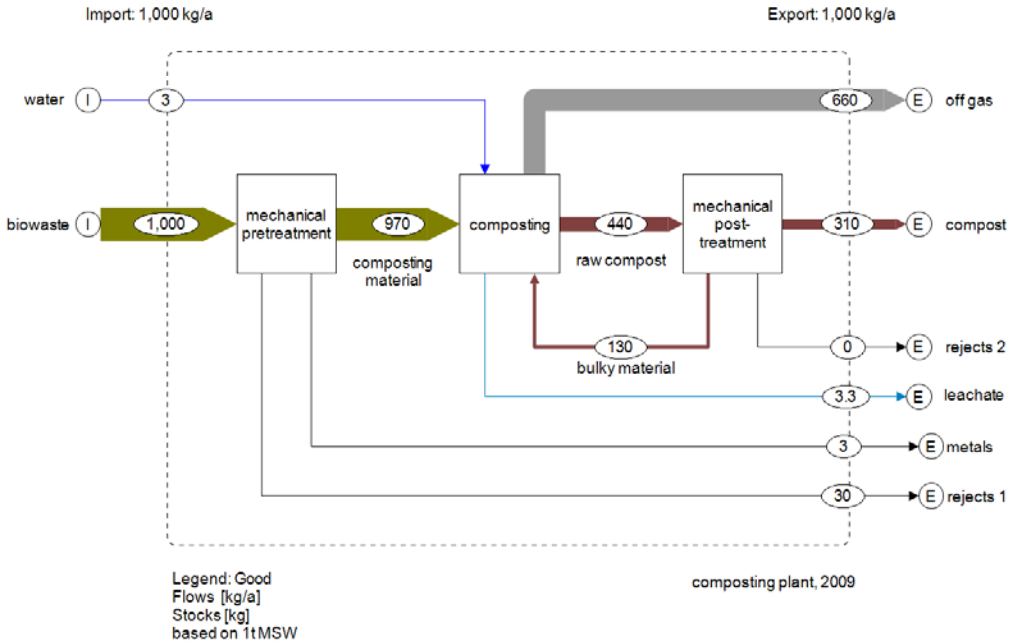

3. Leadership: regional lead flows to air from smelter

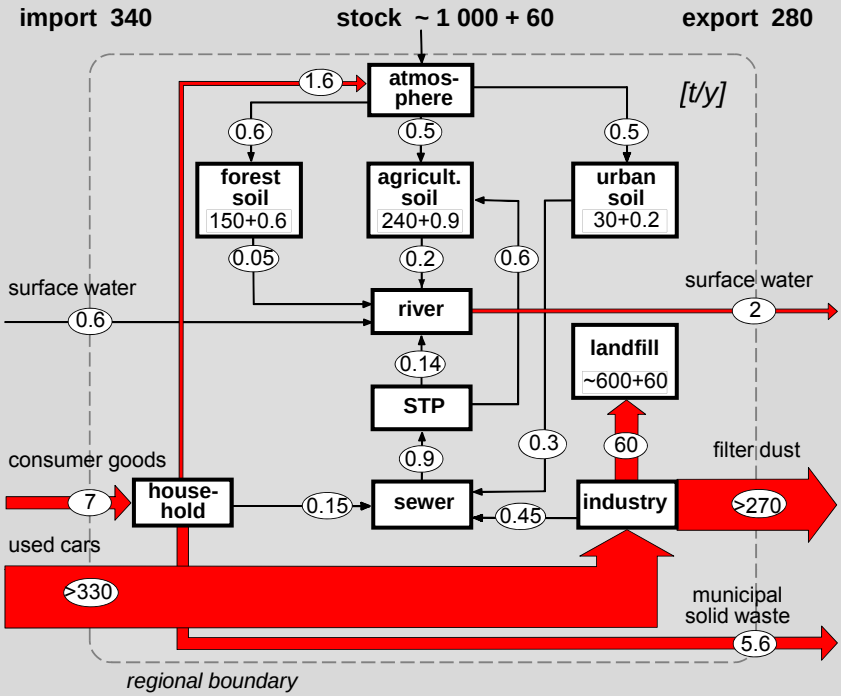

4. Regulations: MFA to cut costs from railway maintenance

The problem: high costs for landfilling spent gravel from RR

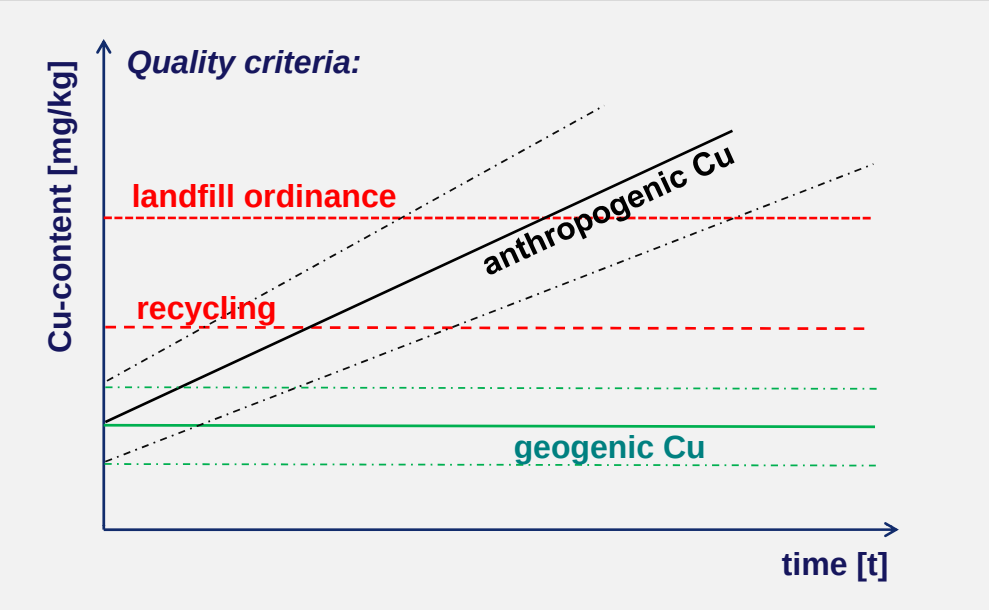

The method: MFA of Cu in track ballast

Result: brake system and contact line as main anthropogenic sources

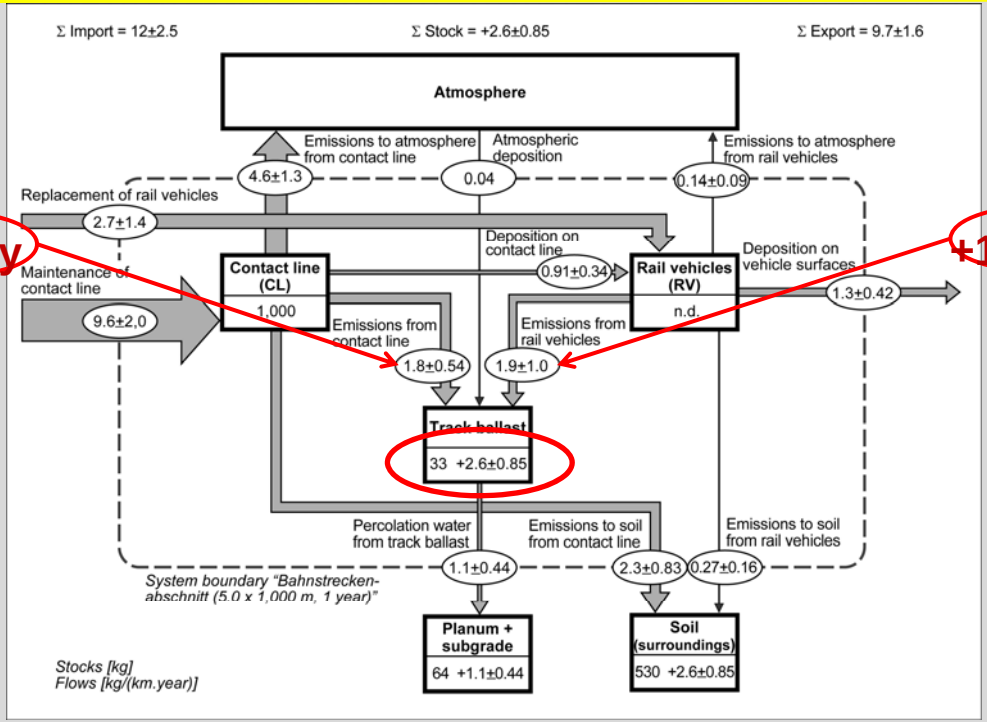

Solution: new material for brake pads, contact line (?), and low Cu gravel

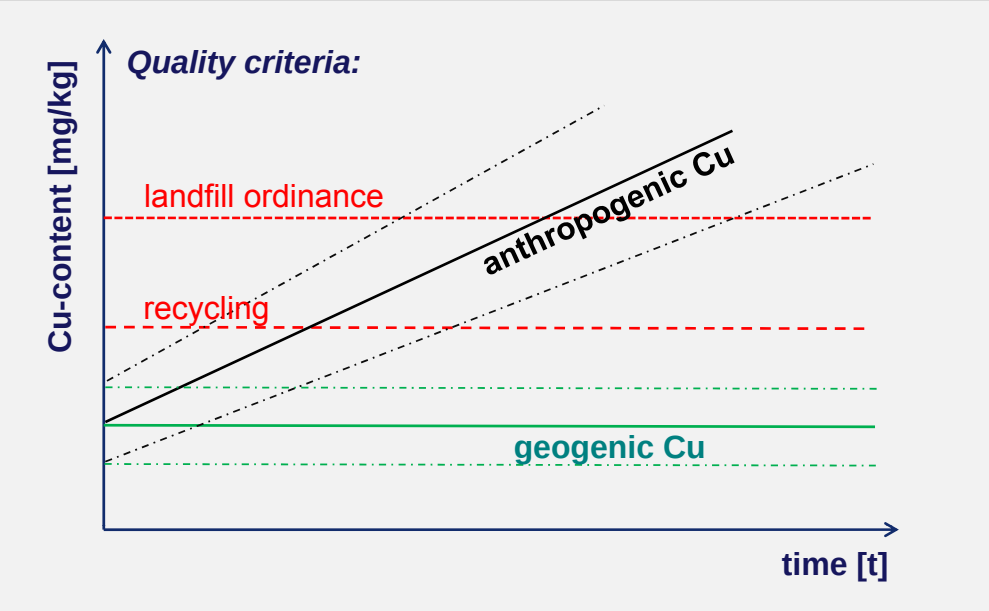

Solution: new material for brake pads, contact line (?), and low Cu gravel

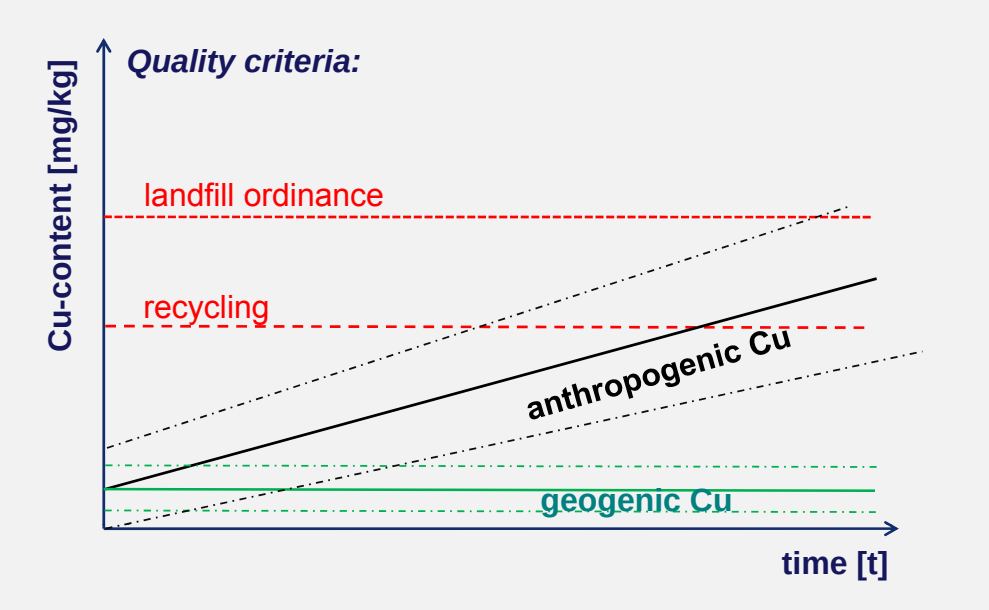

5. Improve knowledge base: case of lead recycling

lead stocks in networks and buildings of Vienna

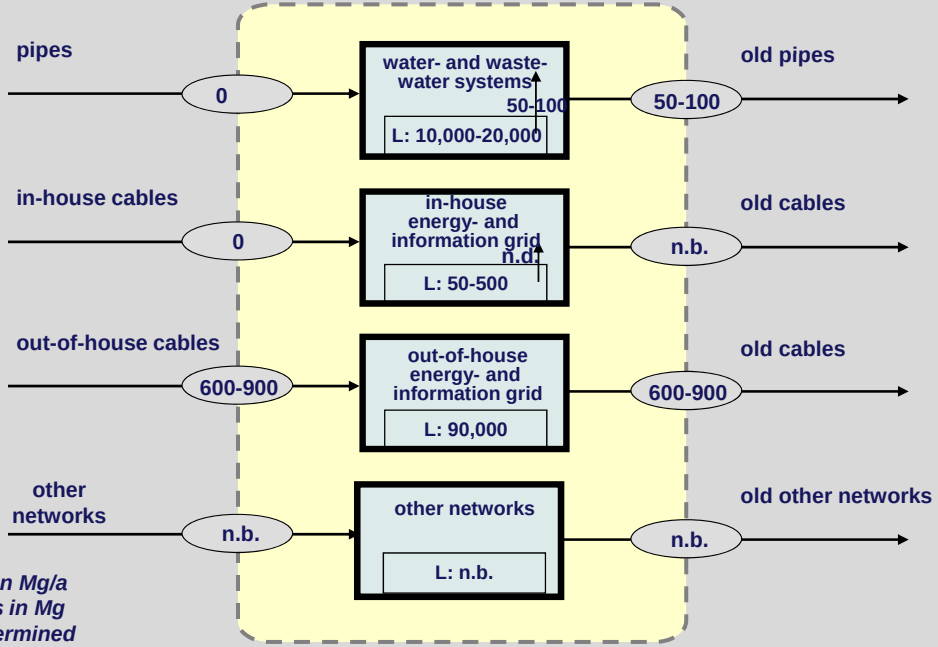

lead flows in Mg/a
lead stocks in Mg
n.b. not determined

Soruce: Möslinger, J., 1998

5. Improve knowledge base: case of waste management

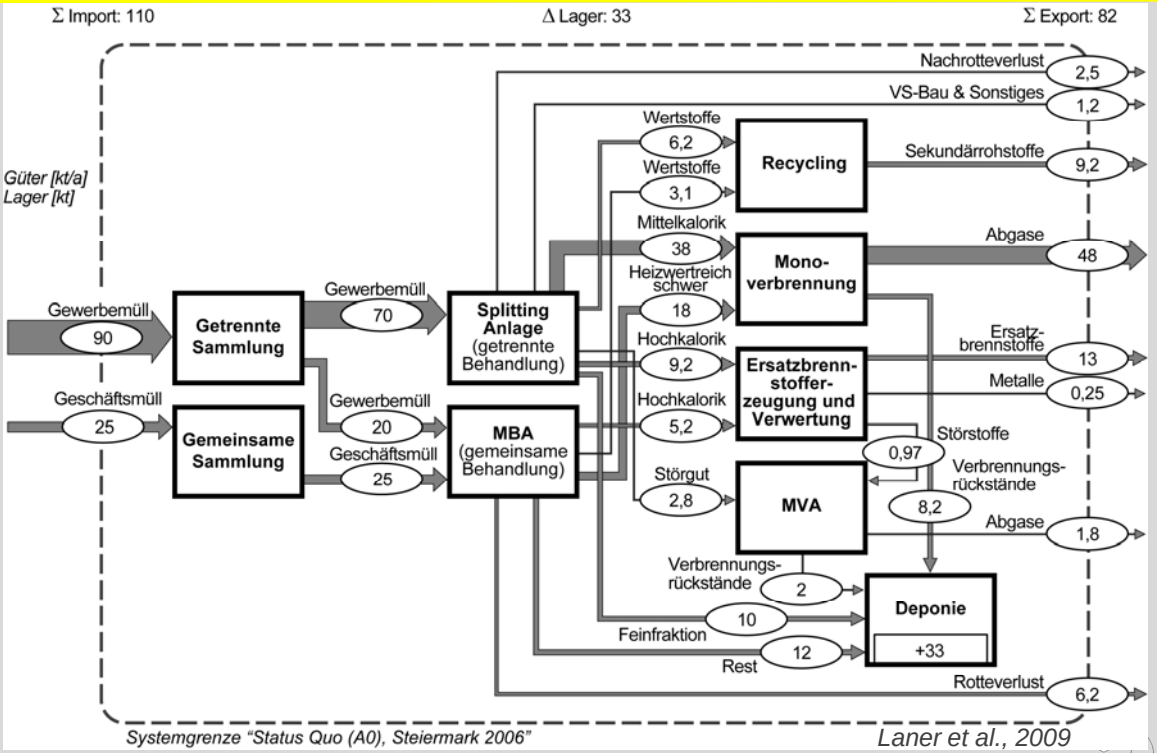

Laner et al., 2009

5. Improve knowledge base

Issue:

Struggle between private and public waste management: Who should collect wastes from industry, business and trade?

Questions:

Where are additional potentials for waste collection and treatment?

What is the “best” solution: private or public?

Procedure:

1. Assessment of waste amounts, 2. MFA of various scenarios, and 3. evaluation of scenarios

Solution:

1. Insufficient information to answer the question (->scenarios)
2. Separate collection and treatment has advantages, no matter if public or private
3. Amount in question relatively small (~ 20%) when compared to rest

Conclusion

Industry will apply MFA if:

- **MFA is known to industry**
- **MFA is instrumental to solve relevant industrial problems**
- **MFA is economic (benefit > cost)**
- **MFA is mandated by law**

Strategy to promote MFA in industry:

- **Identify key industries and apply MFA for problem solving**
- **Make economically successful MFA results known to industry**
- **Educate engineers and practitioners in MFA methodology**
- **Standardize MFA as an instrument for RM, WM and EM**
- **Incorporate MFA into selected legislation (EIA, SEIA)**
- **Incorporate MFA in national planning (RM, WM, EM)**
  -> framework for industrial activities