Automatic Electric Load Identification in Self-Configuring Microgrids

Friederich Kupzog, Tehseen Zia, Adeel Abbas Zaidi
Institute of Computer Technology
Vienna University of Technology
Gusshausstrasse 27-29, 1040 Vienna, Austria
{kupzog, zia, zaidia}@ict.tuwien.ac.at

***Abstract* — A microgrid is the power system of choice for the electrification of rural areas in developing countries. It should be able to adapt to changing load situations without the need for specialists to change the configuration of the microgrid controller. This paper proposes a self-configuring microgrid management system that is able to adjust both generation and demand of the system, so that also in case of growing electricity demand the grid can still be operable by disconnecting unessential loads. A crucial task for the microgrid controller is to automatically identify the connected loads on the basis of their consumption behaviors. For this, a template-matching algorithm is proposed that is based on Dynamic Time Warping, which is primarily used in speech recognition. It has been found that for load profile analysis, simple signal features such as the number of rising edges or the aggregated energy consumption in a given time window is sufficient to describe the signal. In contrast to speech recognition, frequency domain analysis is not necessary.**

Keywords— microgrid operationn, load monitoring, smart load shedding, intelligent loads

I. INTRODUCTION

Shortage of electrical energy around the world is spreading like a forest fire due to the rapidly increasing energy demand. Whilst, energy services are considered as a vital force of economic growth and modernization of developing countries, energy systems around the globe are promptly moving towards their critical operation and consistent availability of electric power has become dubious [Pal08], [Roe05]. In view of the fact that building of large generation plants involves high capital and extensive time, the microgrid concept moves into focus even in developed countries in order to increase security of supply [Jay06]. However, one of the most important applications of microgrids is the electrification of rural areas, where a connection to the public grid is too expensive or not feasible [Bly06].

A microgrid is a small power network of low-rated generating units operating as a single controllable system, whose mandate is to serve a set of electric loads on local level [Las02], [Hat07].

A microgrid can have a connection to an upper large grid (usually the public grid, shown in Figure 1). In this case, the microgrid is synchronized with the upper grid and can exchange energy with it. Only in case of an outage in the large grid, the microgrid may stay operational. However in case of remote areas the microgrid is always operated in an island mode. Here, the challenge is to maintain the balance of generation and demand only using local resources. This balance – being a crucial trait for safe operation – is traditionally maintained by exploiting the reserves on the generation side. However, approaches of on-line energy management including peak-load reduction can support to reduce the demand during the situation of energy imbalance [Zai08].

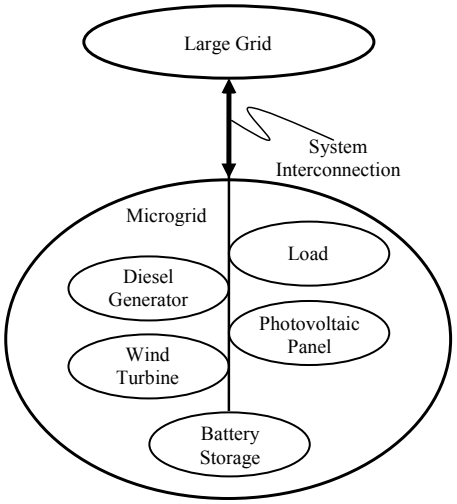

Figure 1. Basic concept and typical elements of a microgrid.

The remainder of the paper is organized as follows: Section II argues the need of self-configuring attribute in a microgrid by taking the problems in microgrid operation into consideration. Section III presents the related work for load identification whereas the proposed approach for using DTW algorithm for load identification is presented in section IV. Results and discussion are made in Section V. Finally, conclusions are drawn and outlooks of the proposed methodology are discussed.

II. SELF-CONFIGURATION OF MICROGRIDS

Microgrids find their applications on islands and in remote areas that are not covered by public power grids. In general, the challenge of operating a small microgrid lies in the fact that at all times the balance between generation and demand has to be maintained. If there is no connection to an external power infrastructure, as it is the case for microgrids in remote areas, then all balancing has to be done using local resources, which

can be adjustable diesel generators, photovoltaic panels, hydro generators, battery sets and others.

In order to set up a new microgrid e.g. in a village, investments into a common infrastructure including power generators, controllers and distribution lines are needed. However, these investments are usually done once to set up the system, while further extensions are not easily financeable. The need for further extensions may arise either from maintenance of degraded components, but probably the main driver for extensions of the microgrid infrastructure is the rise in electricity demand. A common situation for microgrids in developing countries therefore is that these are operated close to the limit of generation capacities. This situation is similar to that of large public power grids. In some developing countries load shedding is performed [Np08] in public power grids, because the systems tend to be overloaded.

A similar strategy can also be adopted for microgrids. In case of overloading unessential loads need to be disconnected from the grid. However, while load-shedding in large public power grids is basing on the brute-force-approach of disconnecting parts of the grid completely, this paper proposes a smarter concept that is especially suited for microgrids. The central idea is to just disconnect those loads that are not essential and where a disconnection is not causing great harm. (e.g. irons or TV sets when considering household appliances in Pakistan).

Since there are basically no restrictions for consumers in traditional power systems when to switch on or off their electric loads, modeling and forecasting of the demand side of the electric power grid is traditionally a wide-reaching discipline that has to take into account a number of different influences, such as social behavior, climate, special public events and the like. Smart systems for automated demand side management (DSM) can selectively switch off the loads in a way that no or only a previously defined and agreed upon decrease in customer process value (e.g. thermal comfort in the case of air conditioning systems). Levels of automation in demand side management can be defined as follows [Zai08a]:

- **Manual DSM** involves a potentially labor-intensive approach such as manually switching off/on each load.
- **Semi-Automated DSM** involves a pre-programmed load management strategy initiated by a person via centralized control system.
- **Fully-Automated DSM** does not involve human intervention, but is initiated through receipt of an external communication signal, which initiates pre-programmed load management strategies.

For the application considered here, where real time control is required to assure microgrid stability, only automated approaches are feasible. Additional costs for the communication infrastructure should to be seen in comparison to the increased availability of electrical energy. However, a detailed cost-benefit analysis can only be done on the basis of concrete case studies and is out of the scope of this technical paper.

The set-up and configuration of a system that automatically disconnects only unessential loads from the microgrid infrastructure in case of an overload condition is relatively complex. Assuming that the microgrid operation is managed by a microgrid central controller (MGCC), which balances generation and demand, this controller has usually direct access to the generators in order to control their output power according to the load situation. It however has not direct access to every single load (see Figure 2).

It is therefore proposed to add a new type of component to the microgrid: a combined power meter and switch, which can be read and operated remotely. The communication between the controller and this local load manager can e.g. be realized by wireless hop-to-hop communication, but other solutions such as power line communication are also possible.

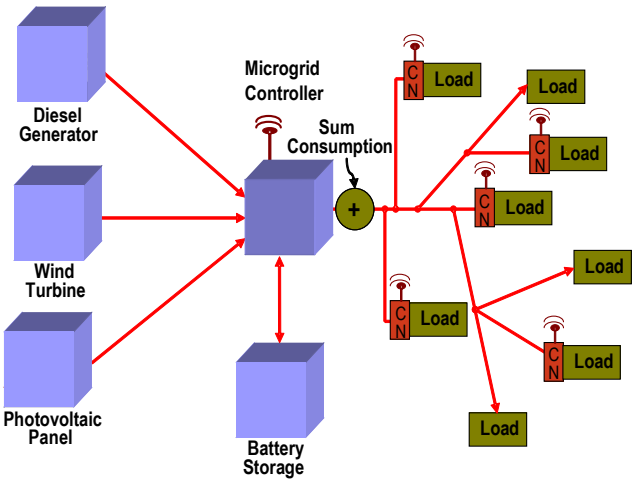

Figure 2. Architecture of the proposed self-configuring microgrid.

Ideally, this power management device is installed between every appliance and the microgrid infrastructure. Using these local manager devices, the central controller is able to identify the type of load that is connected and in case of an overload situation it can decide on the basis of this information whether this load should be shedded or not. In order to make the microgrid set-up as simple as possible, the detection of load type at the local load managers should be done automatically rather that hand-programmed. This automatic detection of resources in the microgrid is referred to as “self-configuration”.

It can be expected, though, that the local load managers will annoy the microgrid users by disconnecting their appliances from the grid. This may result in a number of load managers be bridged or even removed. However, if too many local load managers are removed, the microgrid will frequently collapse due to non-resolvable overload situations (if no individual loads can be disconnected, the whole grid has to be switched off). This black-out problem is hoped to stimulate a learning process for the microgrid users, so that eventually a certain percentage of loads is still accessible through load managers.

One of the main tasks of the local load manager is to find out what kind of load is connected to it. This paper deals with the task to identify the load type from measured consumption data, so that the loads can be arranged in a precedence scheme and shedding is performed using non-essential loads first.

III. Related work

Recognition of loads can be performed by investigating their power consumption profiles such as peak power consumption, daily operation timings and the manner, how they operate (like duty cycle is case of a thematically control devices). This paper proposes a novel approach of load identification by exploiting dynamic time warping (DTW) algorithm, which was primarily design for speech recognition [Sak78], [Rab82].

Researchers are working on various techniques but most of them are focused on load classification to identify residential, commercial or industrial loads by taking meter readings and calculating overall energy consumption that is usually used for load forecasting and tariff calculation [Tse07], [Ger03].

Some research is being carried out in the field of non-intrusive load identification (i.e. no dedicated sensors to individual loads) through steady state power signature monitoring by clustering approaches. George Hart introduced one of the earliest approaches [Har92] in this field, in which individual loads and their schedule are monitored by identifying changes in aggregated power monitored at service entry point. The changes within the aggregated load occurred as the load switched from one constant state to another (i.e. either from on to off or vice versa). In the method, the aggregated load is plotted against time where the changes of the value above a specified threshold (i.e. 15 W in that case) is called an edge (i.e. change from one constant state to another). The value of a detected edge corresponds to the difference between the constant states (i.e. on, off) of a particular load. Although the steady state approach provides a basis for early commercial utilization of nonintrusive methods yet there are limitations Firstly, the steady state approach assumes a unique power signature of every load, which makes it hard to differentiate the loads with similar profiles. Secondly, there is a trade-off between threshold value used for the edge detection and low-power appliances (i.e. the higher the value of threshold, the better the recognition accuracy), which limits the ability to detect low-power appliances.

The steady state approach was further extended in [Col98], where the edges (i.e. positive and negative edges) which are summed to the value zero (i.e. a loop) are monitored over a number of times for load recognition. In the method proposed by Steven [Dre99], five steps (i.e. edge detection, cluster analysis, cluster matching, anomaly resolution and appliances identification) can be used for load monitoring. In his proposal the first step (i.e. edge detection) is performed through hardware, while the second, third and fourth step (i.e. cluster analysis, cluster matching, anomaly resolution) can be performed through cluster techniques. Lastly pattern recognition methods can be used for matching the clusters with the library of steady state signatures for fifth step. The above mentioned methods used electric power as a unique feature.

Other approaches are focused on harmonic contents of steady state loads by utilizing wavelet transform or fast Fourier transform for extracting time varying features a neural network is trained over the features contents which are extracted from the Fourier transformation of the load signal [Cha08].

Due to the limitations in the steady state approach, transient signature of the loads is also worked on and found to be more advantageous as compared to the steady state signature. Transient signatures vary due to the nature of the physical task that the load performs [Lee93], [Nor92]. For instance pump-operated, motor driven, electronically fed and fluorescent loads have respectively long switched-on transients, less substantial switched-on transients, short but high amplitude switched-on transients and long two-step switching-on transients [sul91]. The significance of transient based load recognition is due to several advantages over steady state: Firstly the appliances with identical power signature are distinguishable due to their diverse transient behavior. Secondly, low powered appliances that are ignored in steady state approach due to threshold constraint can be recognized. However this approach requires a high sampling rate which leads to huge amounts of data and expensive measurement equipment.

The transient based load identification methods are based on the time-varying feature patterns; the issue with the time-varying transient patterns is the non-uniform time alignment between pre-stored template patterns and the test loads, which may leads to poor identification accuracy in the load identification methods like artificial neural network. This time alignment problem can be handled using dynamic time warping (DTW) algorithm, mainly utilized in speech recognition applications [Sak78], [Rab81].

IV. Dynamic time warping Algorithm appled to load identification

In order to perform automatic load detection for self-configuring microgrids, it is proposed to apply the technique of Dynamic Time Warping to the problem. Basic behavior patterns of electric loads in microgrids can be pre-defined for a set of possible appliances (air conditioning, refrigerator, iron, TV set etc). The actual measurement can be matched to this set of templates in order to find out what kind of load is connected. For the matching between measured data and the template set, Dynamic Time Warping is applied.

A. Dynamic Time Warping (DTW)

Generally, DTW is a dynamic programming algorithm used for template matching or pattern matching of two time series (the *sample*, which is to be identified, and the *template*, which serves as reference, one for each load type to be detected). The basic idea of the algorithm is that the timing difference between the compared patterns eliminated by warping the time axis of the sample in the way that maximum coincidence with the pre-stored template is achieved. The goal of the algorithm is to find the warping path between the two patterns and the distance between them. For instance there are two vectors of measured power data ($a_1, a_2, \ldots, a_n$) and ($b_1, b_2, \ldots, b_m$) which can be of different length. The algorithm starts with the calculation of the local distance between the elements of both vectors. Distance calculation can be performed using different metrics (like Euclidean, Manhattan etc.) but for the sake of this work Euclidean distance (i.e. absolute distance between the values of two elements) is used. The result of this operation is a matrix of size n x m:

$$d_{ij} = |a_i - b_i|,\ i=1, 2, ..., n \quad , \quad j=1, 2, \ldots, m$$

The dynamic programming algorithm is applied over the local distance matrix for the computation of minimal distance matrix using the following optimization policy:

$$a_{ij} = d_{ij} + min\{(a_{i-1,j-1}, a_{i-1,j}, a_{i,j-1})\}$$

where, a_{ij} is the minimal distance between the load vector (a_1, a_2,…, a_n) and (b_1, b_2,…,b_m).The warping path or the optimal path is the minimal distance path from the start element of to the end element of the matrix . The last step of the algorithm is the decision rule that decide which reference template or templates are closely matched with the known templates. Among several decision rules, the nearest neighbor (NN) rule is applied in this work as followed:

For instance, R represents the reference load feature vectors L_i=1, 2, …, R and the average distance score for each vector from the DTW algorithm is D_i. Then the NN rule is define as:

$$arg\ min[D_i]$$

This means the template L_i with smallest distance is chosen as a recognized load.

B. Load Recognition

Load recognition is performed in two steps. In the first step load data is preprocessed for the extraction of the feature vectors which are then used as a reference template for DTW algorithm in the second step. There may be different attributes that could be considered. In the beginning of this work, energy consumption (EC), rising edge count (REC) and discrete Fourier transform (DFT) were investigated as diagnostic features calculated over a window of length Δt. For better accuracy of the recognition process windows with overlapping time intervals are used.

DTW in speech recognition is usually used together with DFT. However, in load recognition, the signals have considerably less variations. It was found that the application of DFT does only make sense for large window sizes. This is because when using short windows, these windows essentially just include a rising, a falling or oven no edge at all. Although the Fourier transform of these signals are well-defined and can easily be distinguished, the task of detecting the cases rising/falling/no edge can be implemented with considerably less effort using edge count algorithms. But even when using larger windows, distinguishable peaks in the DFT spectrum do only appear if the time signal has a clear oscillatory behavior. Again, the frequency of such an oscillation (e.g. the on-off-cycle of a refrigerator or an air conditioner) is easier detectable using the edge-count technique. Since the measurement system can be assumed to be connected to only a single load, DFT has no advantage for this application. Therefore, only EC and REC techniques are considered here.

C. Experimental setup

Power consumption data of different household appliances have been collected over several days with a sampling rate of 10 s. This was done for:

- Fridge
- Microwave
- Dishwasher
- Coffee Machine
- Computer
- Printer

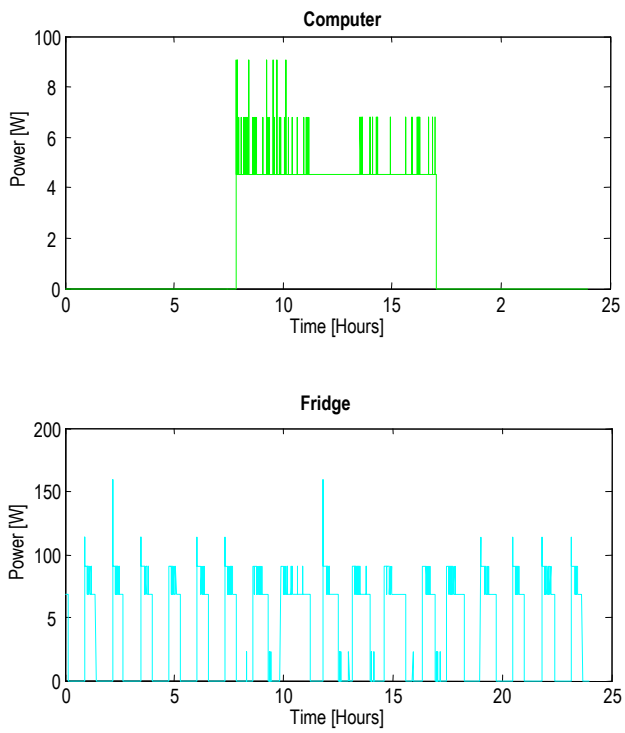

Figure 3. Examples for measured load profiles.

Two examples of the collected power profiles are shown in Figure 3. Although the selected appliances do not reflect a typical equipment of households of a remote area of a developing country, for prototype system development, the actual appliance type does not matter. The proposed approach is tested for several appliances with the outcome of satisfactory results. All the tested appliances are successfully identified.

V. Results and Discussion

The DTW algorithm is applied to the EC and REC feature vectors, which are extracted from collected power consumption data over one day (24 h). The feature vectors have a length of 286 elements (window size is 10 min with 50% overlap). The feature vector of the sample is compared with feature vectors of all the templates using the DTW algorithm. The comparison results are shown in Table 1.

The results show that DTW is a well-suited approach for the recognition of time-varying feature patterns. It does not require extensive computation and gives clear and correct results for all tested samples. Moreover, energy consumption and rising edge counts metrics have proven to be useful features.

TABLE I. COMPAISON OF THE FEATURES "ENERGY CONSUMPTION" AND "RISING EDGE COUNT"

Template: Fridge		
Sample	***Energy Consumption***	***Rising Edge Count***
Fridge 1	3.26e+07	300
Fridge 2	7.83 e+07	444
Fridge 3	5.08 e+07	426
Coffee Machine	3.71e+09	1200
Microwave	3.34e+09	2551
Dishwasher	1.01e+11	2117
Computer	1.19e+09	1633
Printer	1.32e+09	2593

Figure 4 shows a detail result of comparing different samples (fridge, coffee machine, dishwasher, and printer) to a single template (fridge). The bars show the differences of edge counts for the optimal DTW path. Although the template and sample for fridge differ in this experiment, the algorithm is able to clearly determine that the sample data belong to a fridge.

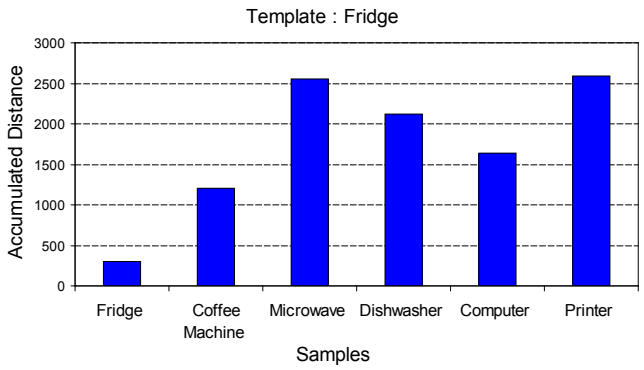

Figure 4. Examples for DTW results.

VI. CONCLUSION

Although considerable related work has been done in the field of automatic load detection, every new application is setting up different requirements, so that previous approaches can not fully be applied. This is also the case for the concept of automated demand side management in a self-configuring microgrid, where every interruptible load has its own power measurement device and therefore can individually be analysed. Since this work is conducted in the context of electrification of rural areas in developing countries, there is only a restricted number of possible loads that get connected to the microgrid. Therefore, a template-matching approach is suited best here to determine the type of load automatically. The problem of comparing differently timed power profiles can be tackled by using the Dynamic Time Warping algorithm, which is successfully used for template matching in speech recognition[Sak78], [Rab81]. It has been found that in case of load profile analysis, simple signal features such as the number of rising edges or the aggregated energy consumption in a given time window is sufficient to describe the signal. In contrast to speech recognition, frequency domain analysis is not necessary. However, the robustness of the approach proposed here has to be verified in future work by applying it to a wider range of sample and template data.

REFERENCES

[1] [Pal08] Palensky, P., Kupzog, F., Zaidi, A. A., Zhuo, K., "A simulation platform for distributed energy optimization algorithms", 6th IEEE Conference on Industrial Informatics, 2008.

[2] [Roe05] Roesener, C., Palensky, P., Weiths, M., Lorenz, B., Stadler, M., "Integral Re-source Optimization Network - a new solution on power markets", IEEE 3rd Inter-national Conference on Industrial Informatics, 2005.

[3] [Jay06] Jayawarna, N., Wu, X., Zhang, Y., Jenkins, N., Barnes, M., "Stability of a Micro-grid", The 3rd IET International Conference on Power Electronics, Machines and Drives, 2006.

[4] [Bly06] Blyden, B. K., Lee, W. J., "Modified Microgrid Concept for Rural Electrification in Africa", IEEE Power Engineering Society General Meeting, 2006.

[5] [Las02] Lasseter, R. H., "Microgrids", IEEE Power Engineering Society Winter Meeting, 2002.

[6] [Hat07] Hatziargyriou, N., Asano, H., Iravani, R., Marnay, C., "Microgrids: An Overview of Ongoing Research, Development, and Demonstration Projects", IEEE Power and Energy Magazine 5(4): pp. 78-94, 2007

[7] [Zai08] Zaidi, A. A., Kupzog, F., Malik, N. S., "Communication Technology Enabling Self-Configuring Microgrids", 6th International Workshop on Frontiers of Information Technology, 2008.

[8] [Np08] http://www.nation.com.pk/pakistan-news-newspaper-daily-english-online/Opinions/Columns/24-Oct-2008/Living-with-load-shedding.

[9] [Zai08a] Zaidi, A. A., Kupzog, F., "Microgrid Automation – A Self-Configuring Approach", 12th IEEE – International Multitopic Conference, 2008.

[10] [Sak78] Sakoe, H., Chiba, S., "Dynamic Programming Algorithm Optimization for Spoken Word Recognition", IEEE Transaction on Acoustics, Speech and Signal Processing, 1978.

[11] [Rab82] Rabiner, R. L., Levinson, S.E, "Isolated and Connected Word Recognition_Theory and Selected Applications"; IEEE Transaction on Communication, 1982.

[12] [Tse07] Tsekouras, G. J., Hatziargyriou, N. D., Dialynas, E. N., "Two-Stage Pattern Recognition of Load Curves for Classification of Electricity Customers", IEEE Transactions on Power Systems, 2007.

[13] [Ger03] Gerbec, D., Gasperic, S., Smon, I., Gubina, F., "Consumers' Load Profile Determination Based on Different Classification Methods", IEEE Power Engineering Society General Meeting, 2003.

[14] [Har92] George, W.H.."Nonintrusive Appliance Load Monitoring" , Proceedings of the IEEE , 1992.

[15] [Col98] Cole, A.l., Albicki, A. , "Algorithm for nonintrusive identification of residential appliances", IEEE International Symposium on Circuits and Systems, 1998.

[16] [Dre99] Drenker, S., Ab, K. , "Nonintrusive Monitoring of Electric Loads" , IEEE Computer Application in Power, 1999

[17] [Cha08] Hsueh, C., Hong, Y., "Load Identification in Neural Networks for a Non-intrusive Monitoring for the Industrial Electric Loads", 11th International Conference on Computer Supported Cooperative Work in Design, 2007.

[18] [sul91] Sultanem, F., "Using Appliance Signatures for Monitoring Residential Loads at Meter Panal Level", IEEE Transation on Power Delivery, vol.6(4), pp. 1380-1385, 1991.

[19] [Lee93] Leeb, S., Kirtley, J. L., "A multiscale transient event detector for nonintrusive load monitoring", IEEE International Conference on Industrial Electronics, Control and Instrumentation, vol.1, pp. 354-359, 1993.

[20] [Nor92] Norford, L. K., Tabors, R. D., "Non-Intrusive Electrical Load Monitoring in Commercial Building" , Symposium on Improving Building Systems in Hot and Humid Climates, 1992