Design of Robust Equalizers

Markus Rupp

A Coruna 26.Sept. 2011

Contact email: mrupp@nt.tuwien.ac.at
web: http://www.nt.tuwien.ac.at

Outline

- Interference scenarios: the task
- Wireless channels: the challenge
- Equalizer on wireless channels: the impact
- Reference models: the hope
- Robust designs of adaptive equalizers: the solution

Interference Scenarios

$$\mathrm{SINR_{be}} = \frac{P_s}{P_{\mathrm{ISI}} + P_{\mathrm{SP-ISI}} + P_{\mathrm{MUI}} + N_o}$$

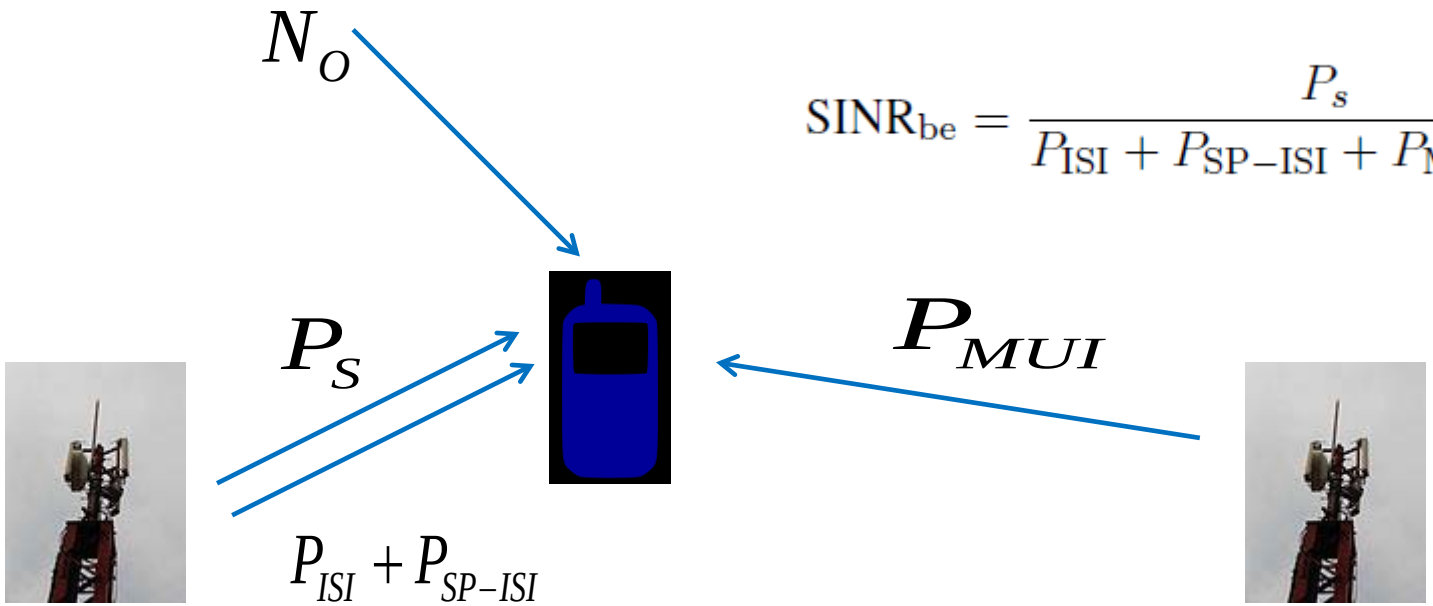

Interference Scenarios

- SINR situation before equalizer

$$\mathrm{SINR}_{\mathrm{be}} = \frac{P_s}{P_{\mathrm{ISI}} + P_{\mathrm{SP-ISI}} + P_{\mathrm{MUI}} + N_o}$$

- What can a linear equalizer achieve, by applying a function onto the received signal?

$$\mathrm{SINR}_{\mathrm{ae}} = \max_{\text{Equalizer strategy}} \mathrm{SINR}_{\mathrm{be}} = \frac{P'_s}{P'_{\mathrm{ISI}} + P'_{\mathrm{SP-ISI}} + P'_{\mathrm{MUI}} + N'_o} \leq \frac{P_s + P_{\mathrm{ISI}} + P_{\mathrm{SP-ISI}}}{N_o}$$

- Make use of ISI and SP-ISI, get rid of MUI.

Outline

- Interference scenarios: the task
- Wireless channels: the challenge
- Equalizer on wireless channels: the impact
- Reference models: the hope
- Robust designs of adaptive equalizers: the solution

Wireless Channels

- The most generic model is simply given by

$$\mathbf{r}_k = \mathbf{H}\mathbf{s}_k + \mathbf{v}_k$$

- 1) frequency selective SISO channel

$$\begin{bmatrix} r_k \\ r_{k-1} \\ \vdots \\ r_{k-R+1} \end{bmatrix} = \begin{bmatrix} h_0 & h_1 & \dots & h_{L-1} & & \\ & \ddots & \ddots & & \ddots & \\ & & h_0 & h_1 & \dots & h_{L-1} \end{bmatrix} \begin{bmatrix} s_k \\ s_{k-1} \\ \vdots \\ s_{k-S+1} \end{bmatrix} + \begin{bmatrix} v_k \\ v_{k-1} \\ \vdots \\ v_{k-R+1} \end{bmatrix}$$

Wireless Channels

- 2) Frequency flat MIMO channel

$$\mathbf{r}_k = \begin{bmatrix} h_{1,1} & \cdots & h_{1,T} \\ \vdots & & \vdots \\ & & \\ h_{R,1} & \cdots & h_{R,T} \end{bmatrix} \begin{bmatrix} s_{k,1} \\ s_{k,2} \\ \vdots \\ s_{k,T} \end{bmatrix} + \begin{bmatrix} v_{k,1} \\ v_{k,2} \\ \vdots \\ v_{k,R} \end{bmatrix}$$

- 3) Multi-user frequency flat MIMO channel

$$\mathbf{r}_k = \sum_{m=1}^{M} \mathbf{H}_m \mathbf{s}_{k,m} + \mathbf{v}_k = \mathbf{H}\mathbf{s}_k + \mathbf{v}_k$$

- 4) Multi-user MIMO over frequency selective channel

$$\mathbf{r}_k = \sum_{m=1}^{M} \begin{bmatrix} \mathbf{H}_{1,1,m} & \cdots & \mathbf{H}_{T,1,m} \\ \vdots & & \vdots \\ \mathbf{H}_{1,R,m} & \cdots & \mathbf{H}_{T,R,m} \end{bmatrix} \begin{bmatrix} \mathbf{s}_{k,1,m} \\ \mathbf{s}_{k,2,m} \\ \vdots \\ \mathbf{s}_{k,T,m} \end{bmatrix} + \begin{bmatrix} \mathbf{v}_{k.1} \\ \mathbf{v}_{k,2} \\ \vdots \\ \mathbf{v}_{k,R} \end{bmatrix}$$

$$= \sum_{m=1}^{M} \left[\mathbf{H}_{1,m}, \ldots, \ldots, \mathbf{H}_{T,m}\right] \begin{bmatrix} \mathbf{s}_{k,1,m} \\ \mathbf{s}_{k,2,m} \\ \vdots \\ \mathbf{s}_{k,T,m} \end{bmatrix} + \begin{bmatrix} \mathbf{v}_{k,1} \\ \mathbf{v}_{k,2} \\ \vdots \\ \mathbf{v}_{k,R} \end{bmatrix}$$

$$\mathbf{r}_k = \sum_{t=1}^{N_T} \sum_{m=1}^{M} \mathbf{H}_{t,m} \mathbf{s}_{k,t,m} + \mathbf{v}_k = \mathbf{H}\mathbf{s}_k + \mathbf{v}_k$$

Outline

- Interference scenarios: the task
- Wireless channels: the challenge
- Equalizer on wireless channels: the impact
- Reference models: the hope
- Robust designs of adaptive equalizers: the solution

Equalizers on Wireless Channels

- Let us consider a SISO frequency selective channel with simple ISI (no noise).

$$\mathbf{r}_k = \begin{bmatrix} h_0 & h_1 & & & \\ & h_0 & h_1 & & \\ & & \ddots & \ddots & \\ & & & h_0 & h_1 \end{bmatrix} \begin{bmatrix} s_k \\ s_{k-\tau} \\ \vdots \\ s_{k-S+1} \end{bmatrix} = \mathbf{H}\mathbf{s}_k$$

$$\mathbf{e}_\tau^T = \begin{bmatrix} 0 & \cdots & 1 & 0 \end{bmatrix}$$

$$\mathbf{e}_\tau^T \mathbf{s}_k = s_{k-\tau}$$

$$\mathbf{H}\mathbf{e}_\tau = \begin{bmatrix} \\ h_1 \\ h_0 \\ \\ \end{bmatrix}$$

Equalizers on Wireless Channels

- Let us consider a SISO frequency selective channel with simple ISI (no noise).

$$\mathbf{r}_k = \begin{bmatrix} h_0 & h_1 & & & \\ & h_0 & h_1 & & \\ & & \ddots & \ddots & \\ & & & h_0 & h_1 \end{bmatrix} \begin{bmatrix} s_k \\ s_{k-\tau} \\ \vdots \\ s_{k-S+1} \end{bmatrix} = \mathbf{Hs}$$

$$\mathbf{He}_\tau s_{k-\tau} = \begin{bmatrix} h_1 \\ h_0 \\ \\ \end{bmatrix} s_{k-\tau} \qquad \textbf{signal part}$$

$$\mathbf{f}^H \mathbf{He}_\tau s_{k-\tau} \propto s_{k-\tau}$$

$$\max_{\mathbf{f}} \mathrm{SIR} = \max_{\mathbf{f}} \frac{P_S}{P_I} = \max_{\mathbf{f}} \frac{\left\| \mathbf{e}_\tau^T \mathbf{H}^H \mathbf{f} \right\|^2}{\mathbf{f}^H \mathbf{H}\mathbf{H}^H \mathbf{f} - \left\| \mathbf{e}_\tau^T \mathbf{H}^H \mathbf{f} \right\|_2^2} = \max_{\mathbf{f}} \frac{\mathbf{f}^H \mathbf{H} \mathbf{e}_\tau \mathbf{e}_\tau^T \mathbf{H}^H \mathbf{f}}{\mathbf{f}^H \mathbf{H} \left(\mathbf{I} - \mathbf{e}_\tau \mathbf{e}_\tau^T \right) \mathbf{H}^H \mathbf{f}}$$

Equalizers on Wireless Channels

- While this expression is complicated, we can apply a monotone mapping:

$$\max_{\mathbf{f}} \frac{P_{\mathrm{S}}}{P_{\mathrm{S}} + P_{\mathrm{I}}} = \max_{\mathbf{f}} \frac{\mathrm{SIR}}{\mathrm{SIR} + 1} = \gamma^{\mathrm{SIR}} \leq 1$$

- Correspondingly:

$$\max_{\mathbf{f}} \gamma^{\mathrm{SIR}} = \max_{\mathbf{f}} \frac{\mathbf{f}^H \mathbf{H} \mathbf{e}_\tau \mathbf{e}_\tau^T \mathbf{H}^H \mathbf{f}}{\mathbf{f}^H \mathbf{H} \mathbf{H}^H \mathbf{f}}$$

- Which leads to the well-known overdetermined ZF solution:

$$\mathbf{f}_\tau^{\max \mathrm{SIR}} = \alpha (\mathbf{H}\mathbf{H}^H)^{-1} \mathbf{H} \mathbf{e}_\tau = \alpha \mathbf{f}_\tau^{\mathrm{ZF,o}}$$

Equalizers on Wireless Channels

- Correspondingly, including noise

$$\max_{\mathbf{f}} \mathrm{SINR} = \max_{\mathbf{f}} \frac{P_{\mathrm{S}}}{P_{\mathrm{I}} + N_0} = \max_{\mathbf{f}} \frac{\mathbf{f}^H \mathbf{H} \mathbf{e}_\tau \mathbf{e}_\tau^T \mathbf{H}^H \mathbf{f}}{\mathbf{f}^H \left[\mathbf{H}\left(\mathbf{I} - \mathbf{e}_\tau \mathbf{e}_\tau^T\right)\mathbf{H}^H + N_0 \mathbf{I}\right] \mathbf{f}}.$$

$$\max_{\mathbf{f}} \frac{P_{\mathrm{S}}}{P_{\mathrm{S}} + P_{\mathrm{I}} + N_o} = \max_{\mathbf{f}} \frac{\mathrm{SINR}}{\mathrm{SINR} + 1} = \gamma^{\mathrm{SINR}} \leq 1.$$

$$\max_{\mathbf{f}} \gamma^{\mathrm{SINR}} = \max_{\mathbf{f}} \frac{\mathbf{f}^H \mathbf{H} \mathbf{e}_\tau \mathbf{e}_\tau^T \mathbf{H}^H \mathbf{f}}{\mathbf{f}^H \left[\mathbf{H}\mathbf{H}^H + N_o \mathbf{I}\right] \mathbf{f}}$$

- results in the (also well-known) MMSE solution

$$\mathbf{f}_\tau^{\max \mathrm{SINR}} = \alpha(\mathbf{H}\mathbf{H}^H + N_o \mathbf{I})^{-1} \mathbf{H} \mathbf{e}_\tau = \alpha \mathbf{f}_\tau^{\mathrm{MMSE}}$$

Equalizers on Wireless Channels

$$0 \le \gamma^{SIR,\max}, \gamma^{SINR,\max} \le 1$$

- What is the maximum SIR (SINR) achievable then?

$$\mathrm{SIR}^{\max} = \frac{\mathbf{e}_\tau^T \mathbf{H}^H \left[\mathbf{H}\mathbf{H}^H\right]^{-1} \mathbf{H}\mathbf{e}_\tau}{\mathbf{e}_\tau^T \left\{\mathbf{I} - \mathbf{H}^H \left[\mathbf{H}\mathbf{H}^H\right]^{-1} \mathbf{H}\right\} \mathbf{e}_\tau} = \frac{\gamma^{SIR,\max}}{1-\gamma^{SIR,\max}}$$

$$\mathrm{SINR}^{\max} = \frac{\mathbf{e}_\tau^T \mathbf{H}^H \left[\mathbf{H}\mathbf{H}^H + \sigma_v^2 \mathbf{I}\right]^{-1} \mathbf{H}\mathbf{e}_\tau}{\mathbf{e}_\tau^T \left\{\mathbf{I} - \mathbf{H}^H \left[\mathbf{H}\mathbf{H}^H + \sigma_v^2 \mathbf{I}\right]^{-1} \mathbf{H}\right\} \mathbf{e}_\tau} = \frac{\gamma^{SINR,\max}}{1-\gamma^{SINR,\max}}$$

- Thus „any“ positive value seems possible.

Equalizers on Wireless Channels

$$\mathrm{SIR}^{\max} = \frac{\gamma^{SIR,\max}}{1-\gamma^{SIR,\max}}$$

$$\mathrm{SINR}^{\max} = \frac{\gamma^{SINR,\max}}{1-\gamma^{SINR,\max}}$$

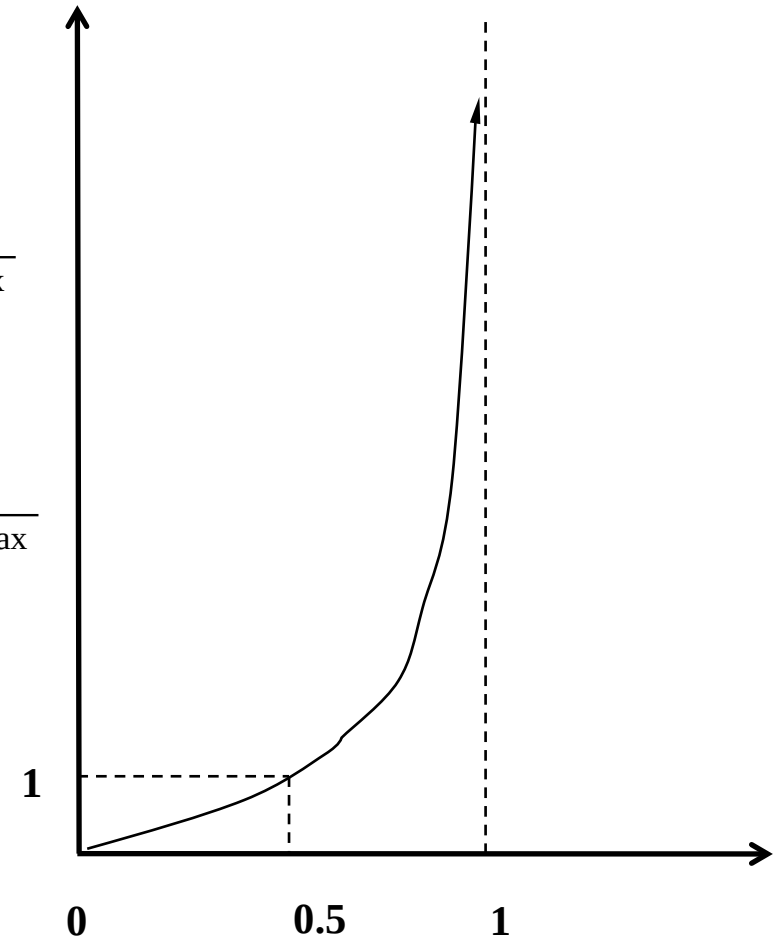

$$0 \le \gamma^{SIR,\max}, \gamma^{SINR,\max} \le 1$$

Underdetermined ZF

- In this case we have $RN_R > SN_T M$
- The ZF solution reads $\mathbf{f}_\tau^{\max SIR} = \alpha \mathbf{H}\left(\mathbf{H}^H \mathbf{H}\right)^{-1} \mathbf{e}_\tau$

$$\mathrm{SIR}^{\max} = \frac{\mathbf{e}_\tau^T \mathbf{H}^H \mathbf{H}\left[\mathbf{H}^H \mathbf{H}\right]^{-1} \mathbf{e}_\tau}{\mathbf{e}_\tau^T \left\{\mathbf{I} - \mathbf{H}^H \mathbf{H}\left[\mathbf{H}^H \mathbf{H}\right]^{-1}\right\} \mathbf{e}_\tau} = \frac{\mathbf{e}_\tau^T \mathbf{e}_\tau}{1 - \mathbf{e}_\tau^T \mathbf{e}_\tau} = \frac{1}{0}$$

- This degree of freedom allows for perfect interference cancellation or interference alignment techniques!

Equalizer Example

- 1) Underdetermined flat MIMO, N_R=4, N_T=3 σ_v^2=1
- 1.0933 + 1.0891i 1.1093 - 0.0326i -0.8637 - 0.5525i
- 0.0774 - 1.1006i -1.2141 - 1.5442i -1.1135 - 0.0859i
- -0.0068 + 1.4916i 1.5326 + 0.7423i -0.7697 + 1.0616i
- 0.3714 - 2.3505i -0.2256 + 0.6156i 1.1174 - 0.7481i
- ZF: Equalizer $\mathbf{f}_1$= 0.2580 + 0.0578i 0.0151 - 0.0447i -0.0256 - 0.1077i 0.1189 - 0.3068i
- SIR_1=oo (oo, oo)
- MMSE: Equalizer $\mathbf{f}_1$= 0.1845 + 0.0547i 0.0053 - 0.0464i -0.0163 - 0.0417i 0.0872 - 0.2441i
- $SINR_1$ =5.99 (5.04 ,4.29) ZF: 5.19 (4.55, 3.97)

Large values, can reconstruct all three streams!

Equalizer Example

- 1) Overdetermined flat MIMO, N_R=3, N_T=4 σ_v^2=1
- 1.0933 - 1.0891i 0.0774 + 1.1006i -0.0068 - 1.4916i 0.3714 + 2.3505i
- 1.1093 + 0.0326i -1.2141 + 1.5442i 1.5326 - 0.7423i -0.2256 - 0.6156i
- -0.8637 + 0.5525i -1.1135 + 0.0859i -0.7697 - 1.0616i 1.1174 + 0.7481i
- ZF: Equalizer $\mathbf{f}_1$= 0.2580 - 0.0578i -0.0072 - 0.1438i -0.2359 + 0.2187i
- SIR_1=1.91 (2.2, 3.0,8.9)
- MMSE: Equalizer $\mathbf{f}_1$= 0.1845 - 0.0547i 0.0210 - 0.0876i -0.1715 + 0.1599i
- $SINR_1$ = 1.07, (1.56,1.58,3.19) ZF:1.02 (1.55,1.48,2.99)

Small values
May reconstruct only one stream!

Equalizer in Wireless Channels

- What works for SISO frequency selective channels, equally works for more complicated transmissions, as long as the model holds: $\mathbf{r}_k = \mathbf{H}\mathbf{s}_k + \mathbf{v}_k$

- For example, MU MIMO on freq. selective channels:

$$\max_{\mathbf{f}} \gamma_{\tau,t,m}^{\mathrm{SINR}} = \max_{\mathbf{f}} \frac{\mathbf{f}^H \mathbf{H}_{t,m} \mathbf{e}_{\tau,t,m} \mathbf{e}_{\tau,t,m}^T \mathbf{H}_{t,m}^H \mathbf{f}}{\mathbf{f}^H \left[\sum_{t'=1}^{N_T} \sum_{m=1}^{M} \mathbf{H}_{t',m} \mathbf{H}_{t',m}^H + N_o \mathbf{I} \right] \mathbf{f}}$$

$$\mathbf{f}_{\tau,t,m}^{\max \mathrm{SINR}} = \alpha \left(\sum_{t'=1}^{N_T} \sum_{m=1}^{M} \mathbf{H}_{t',m} \mathbf{H}_{t',m}^H + N_o \mathbf{I} \right)^{-1} \mathbf{H}_{t,m} \mathbf{e}_{\tau,t,m} = \alpha \mathbf{f}_{\tau,t,m}^{\mathrm{MU-MMSE}}$$

Outline

- Interference scenarios: the task
- Wireless channels: the challenge
- Equalizer on wireless channels: the impact
- Reference models: the hope
- Robust designs of adaptive equalizers: the solution

Reference Models

- Open problems (at this stage) are
  - need to know the channels
  - need to know noise variance
  - need to invert a (large) matrix

- Thus
  - complexity
  - numerical stability
  - Filling the backbone network with data (in MU case)

Reference Models

- What (cost function) does a linear equalizer minimize?
- Answer 1: maximize SINR or SIR
- Answer 2: minimize MMSE or ISI energy (ZF)
- Answer 3: anything else that leads to the desired result

  but helps interpreting the equalizer as: ????

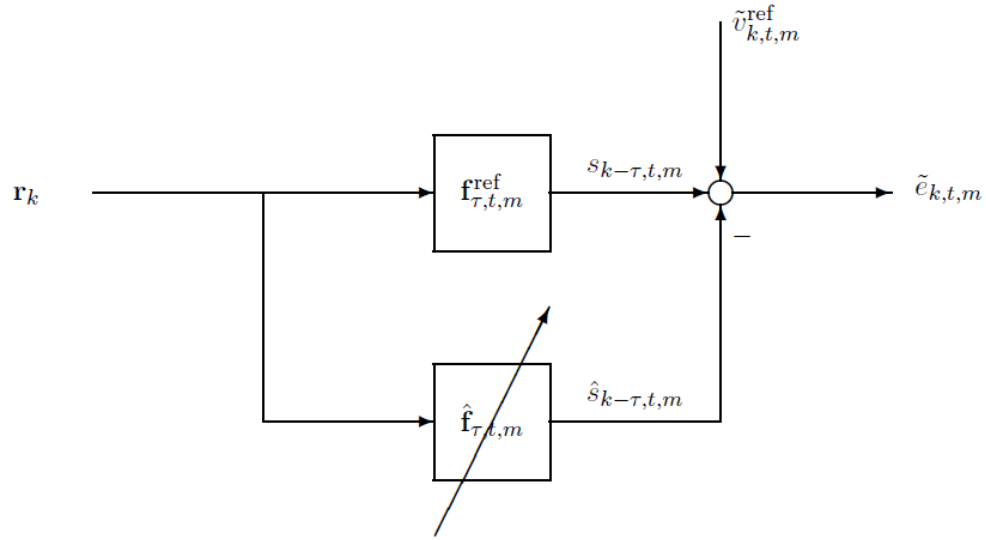

Reference Model

- Interpret (MU-MIMO) ZF as LS problem:

$$\mathbf{f}_{\tau,t,m}^{\mathrm{ZF}} = \arg\min_{\mathbf{f}} \left\| \mathbf{H}^H \mathbf{f} - \mathbf{e}_{\tau,t,m} \right\|_2^2 = \arg\min_{\mathbf{f}} \left\| \mathbf{H}^H \left[\mathbf{f} - (\mathbf{H}\mathbf{H}^H)^{-1} \mathbf{H} \mathbf{e}_{\tau,t,m} \right] \right\|_2^2$$

- Two potential solutions:
- 1) overdetermined LS solution, if $RN_R < SN_T M$

$$\mathbf{f}_{\tau,t,m}^{\mathrm{ZF,o}} = (\mathbf{H}\mathbf{H}^H)^{-1} \mathbf{H} \mathbf{e}_{\tau,t,m}$$

- 2) underdetermined LS solution, if $RN_R > SN_T M$

$$\mathbf{f}_{\tau,l,m}^{\mathrm{ZF,u}} = \mathbf{H}(\mathbf{H}^H \mathbf{H})^{-1} \mathbf{e}_{\tau,t,m}$$

Reference Model

- This also works for MMSE ($E[|s|^2]=1$):

$$\begin{aligned}\mathbf{f}_{\tau,t,m}^{\mathrm{MMSE}} &= \arg\min_{\mathbf{f}} \left(\left\| \mathbf{H}^H \mathbf{f} - \mathbf{e}_{\tau,t,m} \right\|_2^2 + N_o \left\| \mathbf{f} \right\|_2^2 \right) \\ &= \arg\min_{\mathbf{f}} \left\| \left(\mathbf{H}\mathbf{H}^H + N_o \mathbf{I} \right)^{\frac{1}{2}} \left[\mathbf{f} - \left(\mathbf{H}\mathbf{H}^H + N_o \mathbf{I} \right)^{-1} \mathbf{H} \mathbf{e}_{\tau,t,m} \right] \right\|_2^2 + \mathrm{MMSE}\end{aligned}$$

$$\mathrm{MMSE} = \mathbf{e}_{\tau,t,m}^T \left[\mathbf{I} - \mathbf{H}^H \left(\mathbf{H}\mathbf{H}^H + N_o \mathbf{I} \right)^{-1} \mathbf{H} \right] \mathbf{e}_{\tau,t,m}$$

- Only a single solution in this case:

$$\mathbf{f}_{\tau,t,m}^{\mathrm{MMSE}} = \left(\mathbf{H}\mathbf{H}^H + N_o \mathbf{I} \right)^{-1} \mathbf{H} \mathbf{e}_{\tau,t,m}.$$

Reference Model

- Model equalizer as

$$\mathbf{e}_{\tau,t,m} = \mathbf{H}^H \mathbf{f}_{\tau,t,m}^{\mathrm{MMSE}} + \mathbf{v}_{\tau,t,m}^{\mathrm{MMSE}}$$

$$\mathbf{v}_{\tau,t,m}^{\mathrm{MMSE}} = \left(\mathbf{I} - \mathbf{H}^H \left(\mathbf{H}\mathbf{H}^H + N_o \mathbf{I}\right)^{-1} \mathbf{H}\right) \mathbf{e}_{\tau,t,m}$$

- Apply equalizer on observation $\mathbf{r}_k$:

$$\mathbf{f}_{\tau,t,m}^{\mathrm{MMSE,H}} \mathbf{r}_k = s_{k-\tau,t,m} - \mathbf{v}_{\tau,t,m}^{\mathrm{MMSE,H}} \mathbf{s}_k + \mathbf{f}_{\tau,t,m}^{\mathrm{MMSE,H}} \mathbf{v}_k = s_{k-\tau,t,m} + \tilde{v}_{k,t,m}^{\mathrm{MMSE}}$$

- For ZF similar result!

Outline

- Interference scenarios: the task
- Wireless channels: the challenge
- Equalizer on wireless channels: the impact
- Reference models: the hope
- Robust designs of adaptive equalizers: the solution

Robust Designs

- Consider classical adaptive parameter estimation (identification) problem:

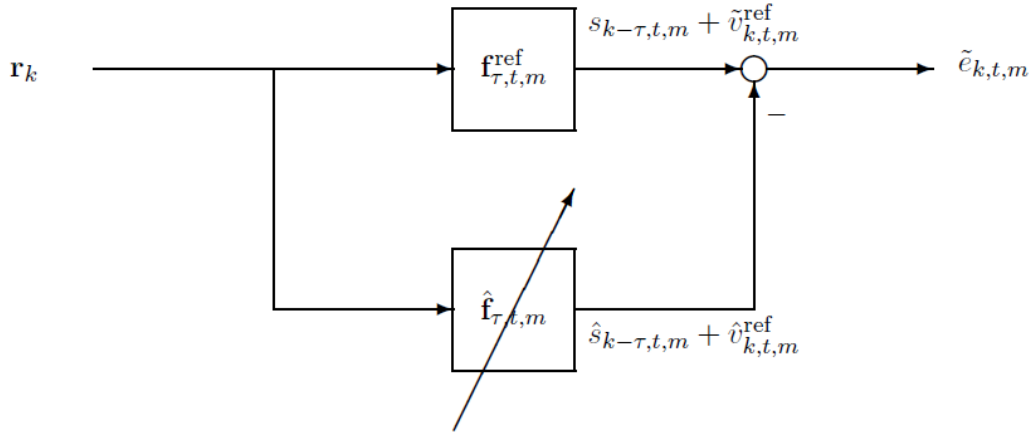

- Under what condition can we design an (iterative, recursive) algorithm that ensures the MMSE/ZF solution under any signals (symbol, noise, channels..) ?

Robust Design

- **<u>Iterative algorithm:</u>**

$$\begin{aligned}\hat{\mathbf{f}}_l &= \hat{\mathbf{f}}_{l-1} + \mu \mathbf{H}\mathbf{B}(\mathbf{e}_\tau - \mathbf{H}^H \hat{\mathbf{f}}_{l-1}) \\ &= \hat{\mathbf{f}}_{l-1} + \mu \mathbf{H}\mathbf{B}(\mathbf{H}^H \mathbf{f}^{\mathbf{ref}} + \overline{\mathbf{v}} - \mathbf{H}^H \hat{\mathbf{f}}_{l-1}) \\ &= \hat{\mathbf{f}}_{l-1} + \mu \mathbf{H}\mathbf{B}\left(\mathbf{H}^H \left[\mathbf{f}^{\mathbf{ref}} - \hat{\mathbf{f}}_{l-1}\right] + \overline{\mathbf{v}}\right)\end{aligned}$$

- Works on a fixed data set **X** until the fixed point $\mathbf{f}^{ref}$ is achieved (to some extent).

- **<u>Recursive algorithm:</u>**

$$\begin{aligned}\hat{\mathbf{f}}_k &= \hat{\mathbf{f}}_{k-1} + \mu \mathbf{Y}_\mathbf{k}(\mathbf{s}_k - \mathbf{X}_\mathbf{k}^H \hat{\mathbf{f}}_{k-1}) \\ &= \hat{\mathbf{f}}_{k-1} + \mu \mathbf{Y}_\mathbf{k}\left(\mathbf{X}_\mathbf{k}^H \left[\mathbf{f}^{\mathbf{ref}} - \hat{\mathbf{f}}_{k-1}\right] + \overline{\mathbf{v}}_\mathbf{k}\right)\end{aligned}$$

- Works on an instantaneous data set $\mathbf{X}_k$,$\mathbf{Y}_k$ until the fixed point $\mathbf{f}^{ref}$ is achieved (to some extent).

Robust Design

- **<u>Iterative algorithms</u>**
  - typically ZF problem,
  - solves the matrix inversion, given the channel

- Theorem: The iterative algorithm converges to zero, if the following conditions are satisfied:

1) All eigenvalues of $\mathbf{I} - \mu \mathbf{X}\mathbf{B}\mathbf{X}^H$ are in magnitude smaller than one, or correspondingly

$$0 < \mu < \frac{2}{\max \lambda\{\mathbf{X}\mathbf{B}\mathbf{X}^H\}}.$$

2) The noise $\bar{\mathbf{v}} = \mathbf{0}$.

- →Such conditions are typically satisfied!

Robust Design: Fast Speed Learning

- The free parameter matrix B offers interesting options for speeding up convergence.
- The optimally fast algorithm

$$\hat{\mathbf{f}}_l = \hat{\mathbf{f}}_{l-1} + \mu \left[\mathbf{H}\mathbf{H}^H\right]^{-1} \mathbf{H}(\mathbf{e}_{\tau,t,m} - \mathbf{H}^H \hat{\mathbf{f}}_{l-1}) \qquad ; l = 1, 2, \ldots$$

- Requires a matrix inverse. But for a set of channels with a priori known information (PedB, VehA), it can be replaced by a fixed matrix:

$$\hat{\mathbf{f}}_l = \hat{\mathbf{f}}_{l-1} + \mu \mathbf{R}_{\mathrm{HH}}^{-1} \mathbf{H}(\mathbf{e}_{\tau,t,m} - \mathbf{H}^H \hat{\mathbf{f}}_{l-1}) \qquad ; l = 1, 2, \ldots.$$

Robust Design

- **Recursive algorithm:** $\tilde{\mathbf{f}}_k = \tilde{\mathbf{f}}_{k-1} - \mu \mathbf{Y}_k \left(\mathbf{X}_k^H \tilde{\mathbf{f}}_{k-1} + \bar{\mathbf{v}}_k \right) \quad ; k = 1, 2, \ldots,$

- **Theorem:** for $\mathbf{X}_k = \mathbf{r}_k$, $\mathbf{Y}_k = \mathbf{B}\mathbf{r}_k$ and $\bar{\mathbf{v}}_k = \tilde{v}_k \mathbf{r}_k$

  the recursive algorithm converges, if the following conditions hold:

1) The algorithm is called robust and l_2-stable for step-sizes $0 < \mu < \max_k \frac{1}{\mathbf{r}_k^H \mathbf{B} \mathbf{r}_k}$ (alternatively for a time variant step-size $0 < \mu_k < \frac{2}{\mathbf{r}_k^H \mathbf{B} \mathbf{r}_k}$). Consequently there does not exist any sequence (noise or data) that causes the algorithm to diverge.
2) Furthermore, if the noise $\tilde{v}_k$ is l_2 bounded, i.e., $\sum \mu_k |\tilde{v}_k|^2 < S_v < \infty$, the undistorted a priori estimation error $\sqrt{\mu_k} e_{a,k} = \sqrt{\mu_k} \mathbf{r}_k^H \tilde{\mathbf{f}}_{k-1}$ turns to zero.
3) If additionally, the regression vector $\mathbf{r}_k$ is of persistent excitation, the parameter error vector turns to zero $\lim_{k \to \infty} \tilde{\mathbf{f}}_{k-1} = \mathbf{0}$.

Robust Design

- Most well-known member of this group is the

  <u>LMS algorithm for equalization</u>:

$$\begin{aligned}\hat{\mathbf{f}}_k &= \hat{\mathbf{f}}_{k-1} + \mu_k \mathbf{r}_k [s^*_{k-\tau,t,m} - \mathbf{r}_k^H \hat{\mathbf{f}}_{k-1}] \qquad ; k = 1, 2, \ldots \\ &= \hat{\mathbf{f}}_{k-1} + \mu_k \mathbf{r}_k [\mathbf{r}_k^H (\mathbf{f}^{\mathrm{MMSE}}_{\tau,t,m} - \hat{\mathbf{f}}_{k-1}) + \tilde{v}^{\mathrm{MMSE}}_{k,t,m}].\end{aligned}$$

- With the step-size condition:

$$0 < \mu_k < \frac{2}{\|\mathbf{r}_k\|_2^2}$$

Robust Design

- Problematic is the never ending noise energy, resulting in a steady-state mismatch of size:

$$\mathcal{M}^{\mathrm{MMSE}} = \frac{\alpha}{2-\alpha}\left(\|\mathbf{v}_{\tau,t,m}^{\mathrm{MMSE}}\|_2^2 + N_o\|\mathbf{f}_{\tau,t,m}^{\mathrm{MMSE}}\|_2^2\right)$$

- assuming a normalized step-size $\mu_k = \alpha/\|\mathbf{r}_k\|_2^2$

- Speed-up variants are simply designed by $\mathbf{B} = (R_{\mathrm{HH}} + N_o\mathbf{I})^{-1}$
- Block update variants are also possible.

Blind Channel Estimation (for equalization)

- Basic idea of blind estimation:

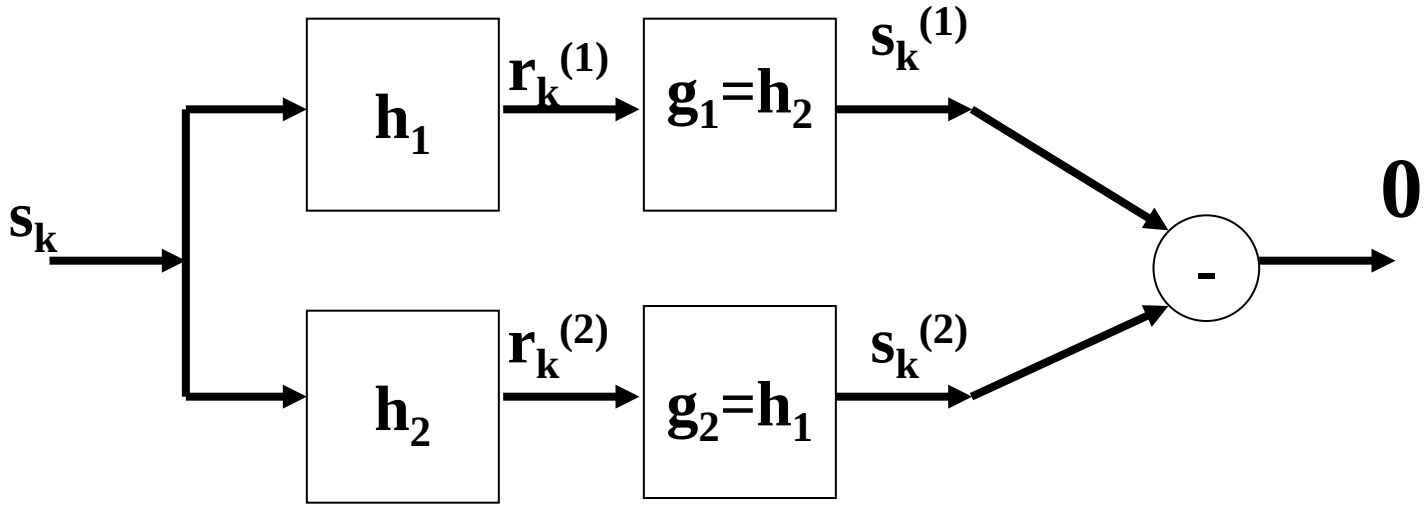

Robust Design: Blind Channel Estimation

- The concept can straightforwardly be extended to the blind channel estimation (for equalization) case.
- Consider this LS problem:

$$
\begin{aligned}
\mathbf{h}^{\mathrm{B}} &= \arg \min_{\mathbf{h}=\begin{bmatrix} \mathbf{h}_2 \\ \mathbf{h}_1 \end{bmatrix}} \left\| \mathbf{H}_1^H \mathbf{h}_2 - \mathbf{H}_2^H \mathbf{h}_1 \right\|_2^2 \\
&= \arg \min_{\mathbf{h}} \left\| \left[\mathbf{H}_1^H, -\mathbf{H}_2^H \right] \mathbf{h} \right\|_2^2 \\
&= \arg \min_{\mathbf{h}} \left\| \mathbf{H}^H \mathbf{h} \right\|_2^2 .
\end{aligned}
$$

- Drawback: need to know the channel in order to estimate it!

Robust Design: Blind Channel Estimation

- Take observations: $\mathbf{r}_k^T = [\mathbf{r}_k^{(1)T}, -\mathbf{r}_k^{(2)T}]$
- Stack them into matrices: $\mathbf{R}_k^H = [\mathbf{R}_k^{(1)H}, -\mathbf{R}_k^{(2)H}]$
- Design recursive update

$$
\begin{aligned}
\hat{\mathbf{h}}_k &= \hat{\mathbf{h}}_{k-1} - \mu_k \mathbf{R}_k \mathbf{R}_k^H \hat{\mathbf{h}}_{k-1} \qquad ; k = 1, 2....\\
\tilde{\mathbf{h}}_k &= \tilde{\mathbf{h}}_{k-1} - \mu_k \mathbf{R}_k (\underbrace{\mathbf{R}_k^H \mathbf{h}^{\mathrm{B}} - \mathbf{V}_k^H \mathbf{h}^{\mathrm{B}}}_{=0} - \mathbf{R}_k^H \hat{\mathbf{h}}_{k-1})\\
&= \tilde{\mathbf{h}}_{k-1} - \mu_k \mathbf{R}_k (\mathbf{R}_k^H \tilde{\mathbf{h}}_{k-1} - \mathbf{V}_k^H \mathbf{h}^{\mathrm{B}}).
\end{aligned}
$$

- Reference system is simply zero!
- Stability for $0 < \mu_k < \dfrac{1}{\max \lambda\{\mathbf{R}_k \mathbf{R}_k^H\}}$

Conclusion

- Maximizing SINR is equivalent to classical equalizer design criteria (MMSE, ZF).
- By formulating the linear equalizer problems as LS problem, we obtain a reference model.
- Due to the reference model, many well known results from adaptive filters can be applied to adaptive equalizer designs, resulting in robust designs.

Conclusion

- Not all adaptive algorithms are robust.
- Consider the well-known adaptive ZF algorithm from Lucky (1965):

$$\hat{\mathbf{f}}_k = \hat{\mathbf{f}}_{k-1} + \mu \mathbf{s}_k (s_k - \hat{\mathbf{f}}_{k-1}^H \mathbf{r}_k)$$

- This algorithm has recently be proven to be non-robust!

Thank you for your attention

- M.Rupp, "Robust Design of Adaptive Equalizers," accepted for publication in IEEE Transactions on Signal Processing, 2012.

- M. Rupp: "*Convergence Properties of Adaptive Equalizer Algorithms*"; IEEE Transactions on Signal Processing, **59** (2011), 6; pp. 2562 - 2574.

- Slides can be downloaded from http://publik.tuwien.ac.at/files/PubDat_199101.pdf