Collaborative Working Group on Hybrid Processes

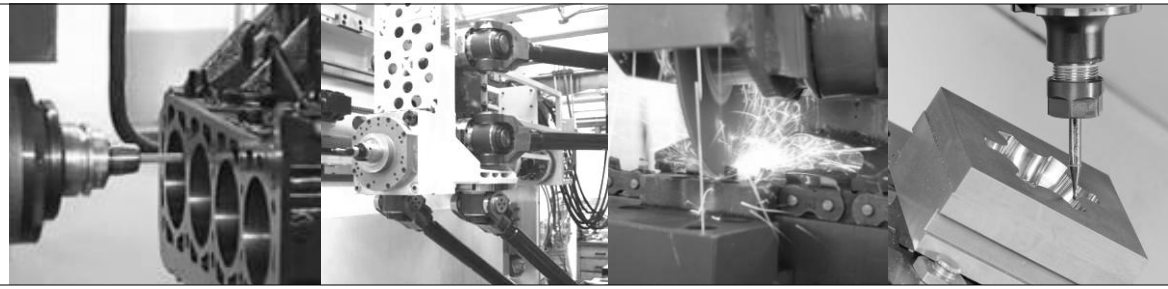

Optimization of Cutting Processes by Multiaxial-Vibration Assisted Machining

F. Bleicher, J. Bernreiter
Vienna University of Technology, Institute of Production Engineering, Austria

August 25th, 2011

TECHNISCHE UNIVERSITÄT WIEN
Vienna University of Technology

Outline

1. Motivation – vibration assisted machining
2. Design of multi-axial vibration system
3. Machining tests
4. Summary/Outlook

Machining center for US assisted grinding

Gildemeister Ultrasonic 70 linear

main spindle

stator of inductively coupled power transmission

rotor of power transmission

housing of piezo - actuator

tool clamping

grinding tool

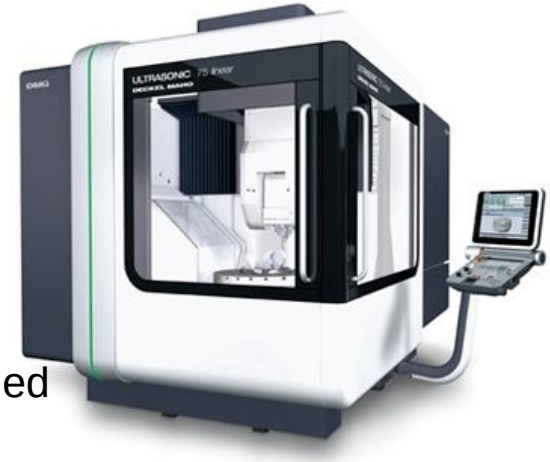

Scratch test

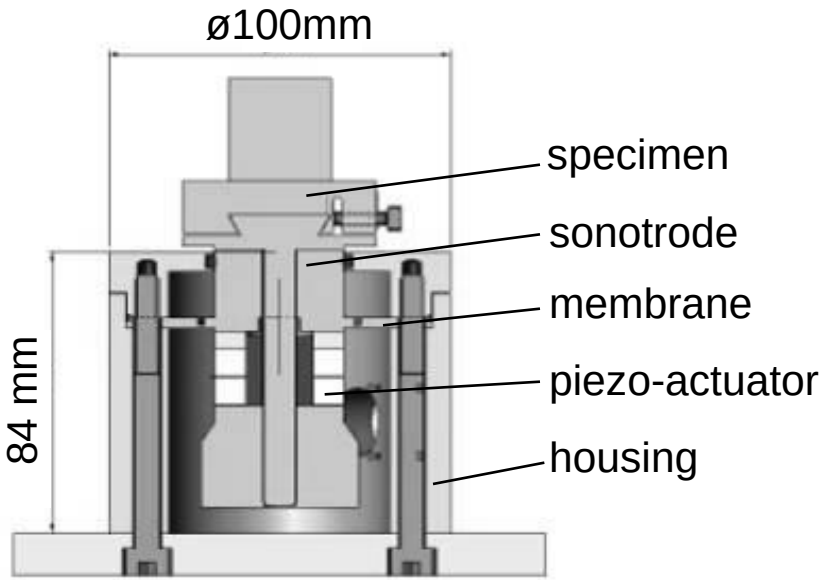

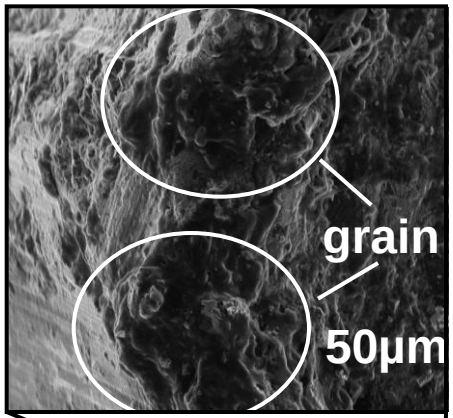

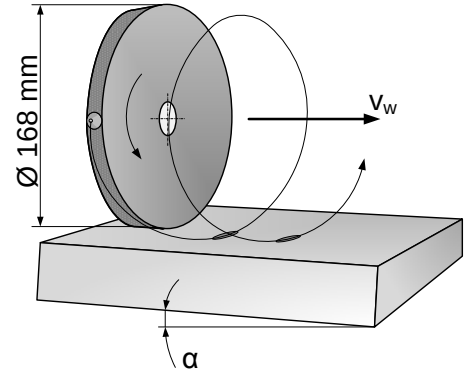

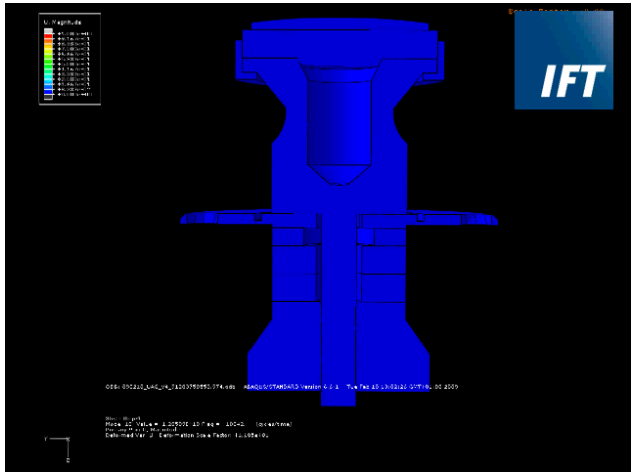

Motivation - 1D-vibration vs. 2D-/3D-vibration

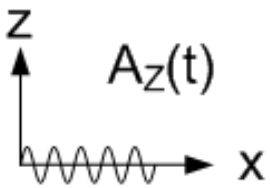

1D-US-vibration

- increase of material removal rate in machining of brittle-hard materials
- significant increase of tool life with (ultrasonic) vibration, especially in boring operation
- improvements in chip flushing
- tool-workpiece interaction shows significant influence on dynamic coupling of US vibration
- active control of vibration amplitude is difficult

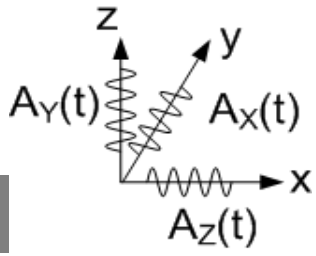

3D-vibration

- direct adjustment and control of amplitude and frequency for discontinuous cut
- no US-resonance effect
- applying optimized direction of vibration (e.g. orbital drilling)
- different mode shapes possible

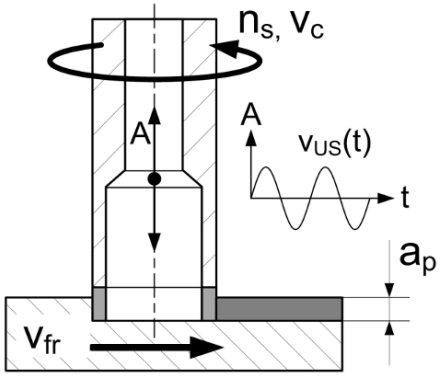

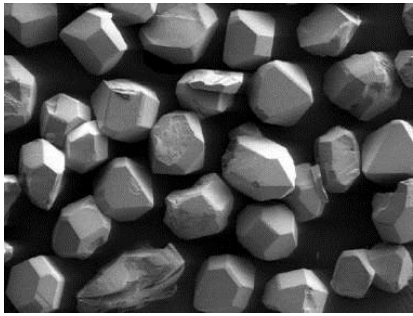

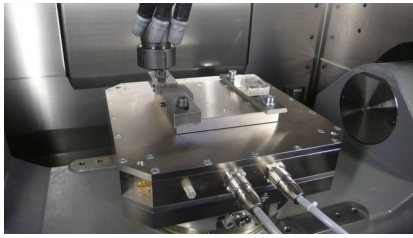

Outline

Design concept of 2D-/3D - actuator

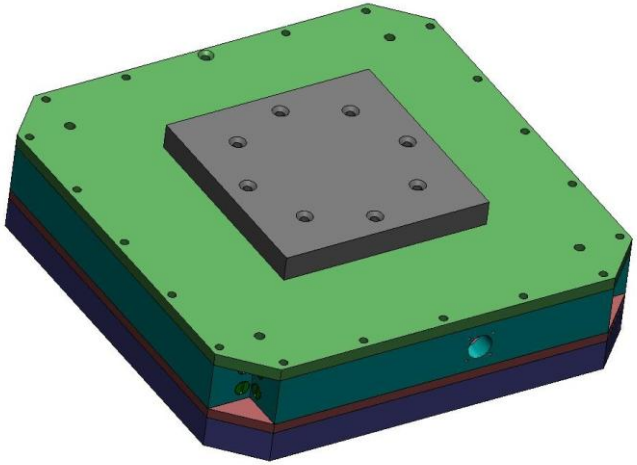

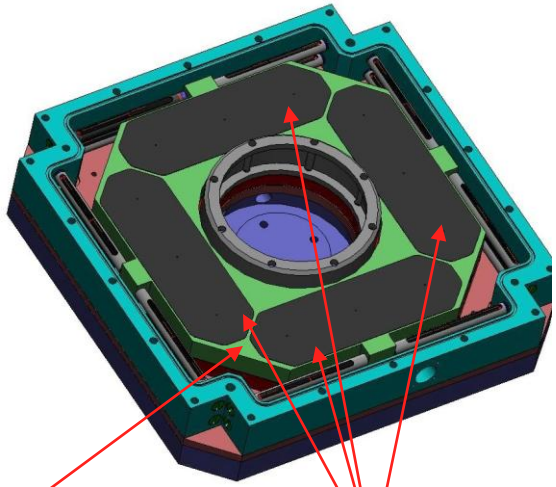

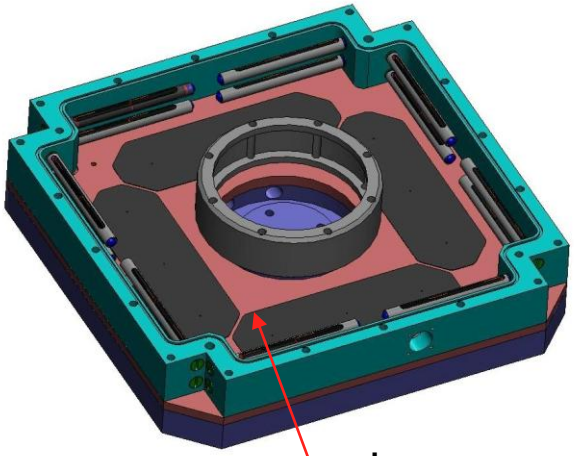

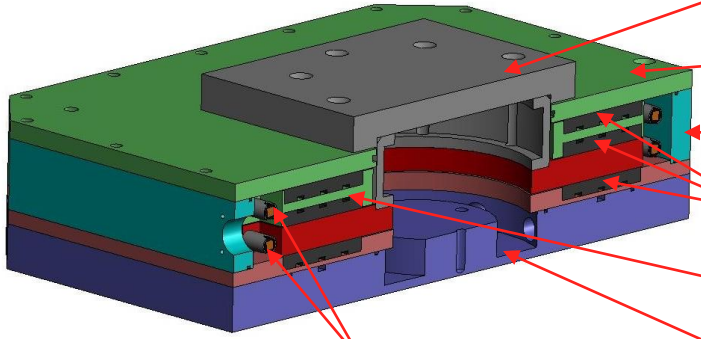

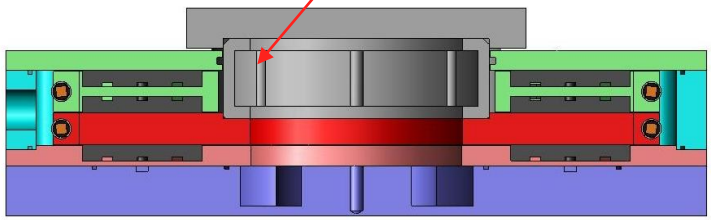

Technical specification

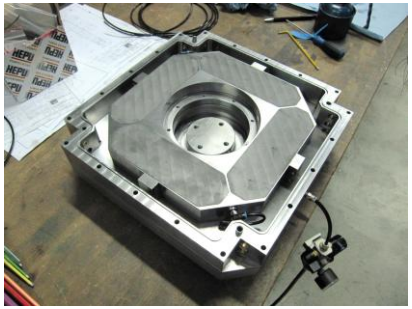

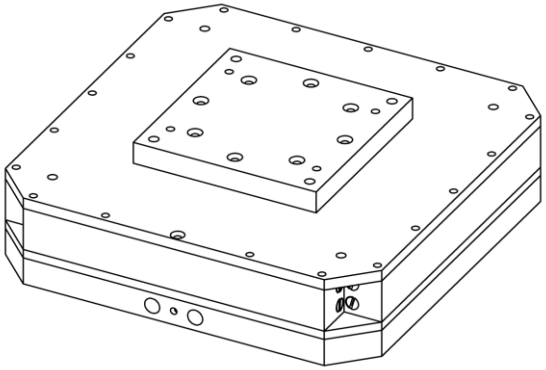

2 stacks in lin

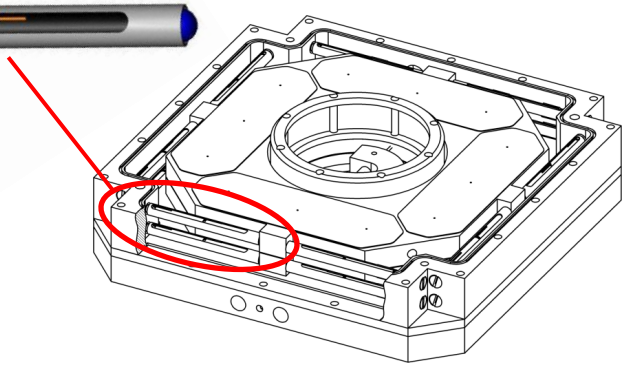

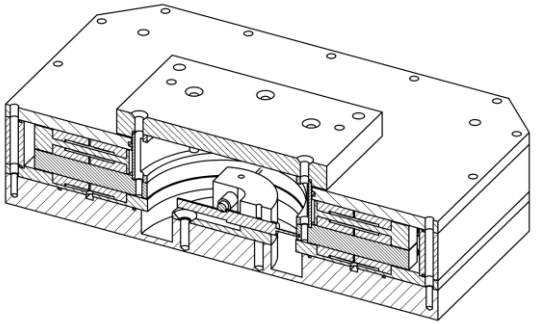

Technical specification:

dimensions	L x W x H	350 x 350 x 95 mm³
platform dimensions	L x W	170 x 170 mm²
max. payload		20 kg
max. amplitude	X / Y	25µm / 25 µm
stiffness	k_{xx} / k_{yy}	14 N/µm / 14 N/µm
max. frequency	f_{max}	500Hz
mode shape		free adjustable

Experimental platform - control concept

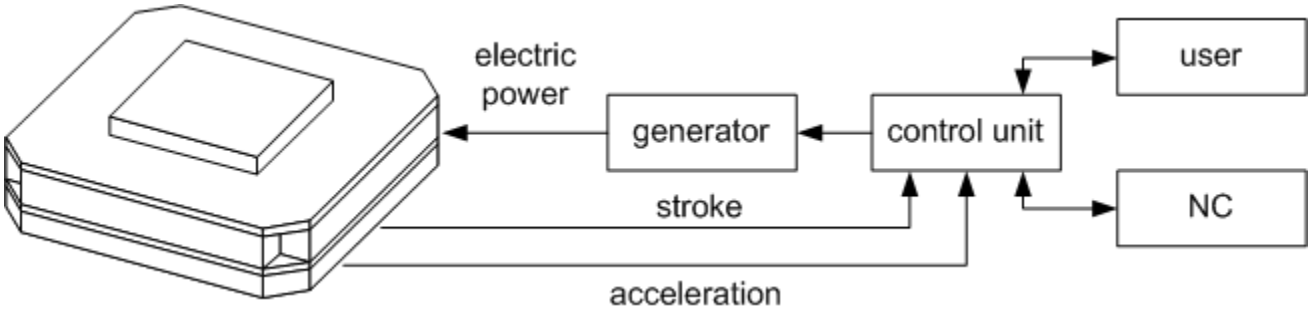

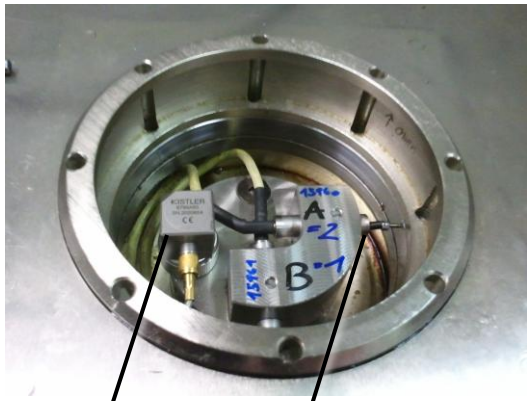

acceleration sensor

position sensor X

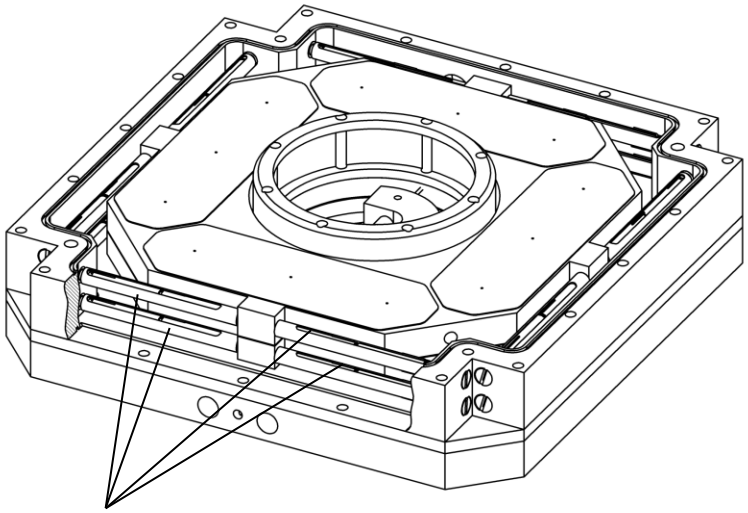

piezo actor (2 stacks)

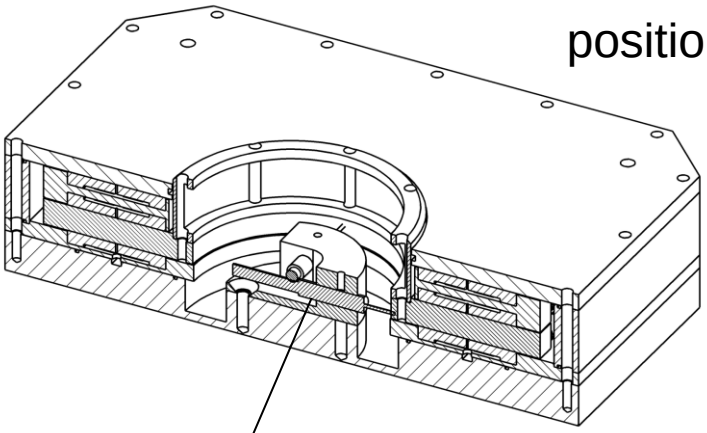

y

x

position sensor X

Mode of vibration

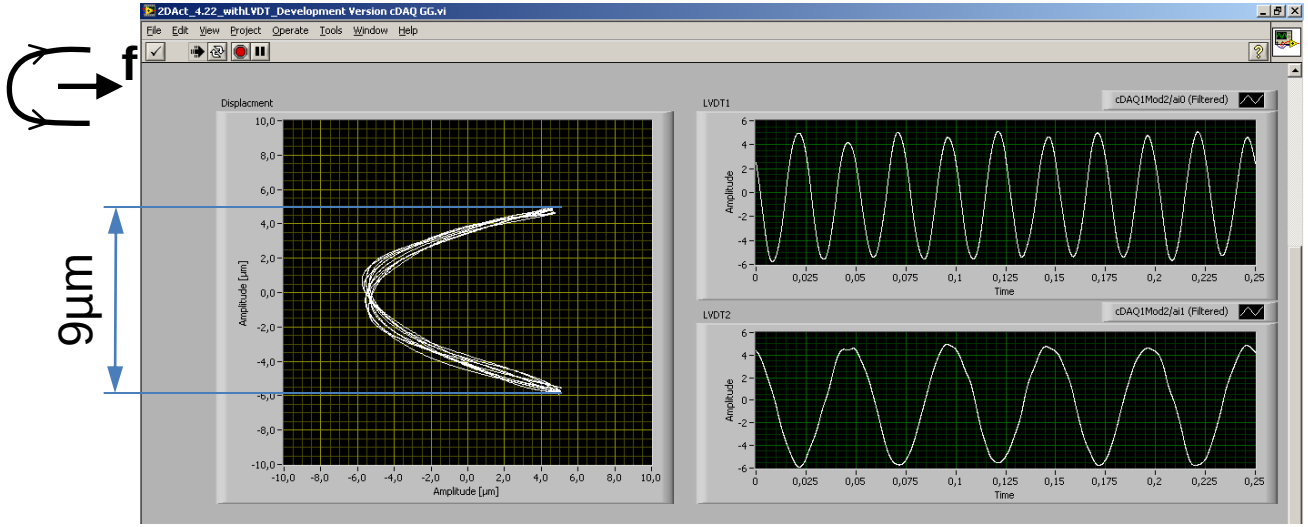

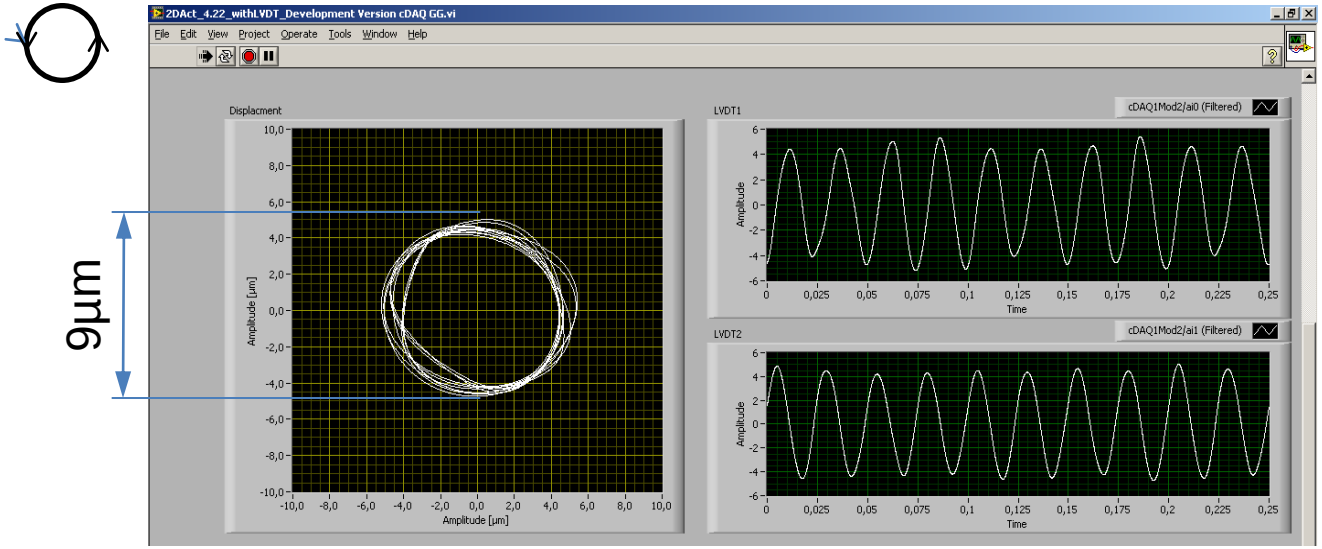

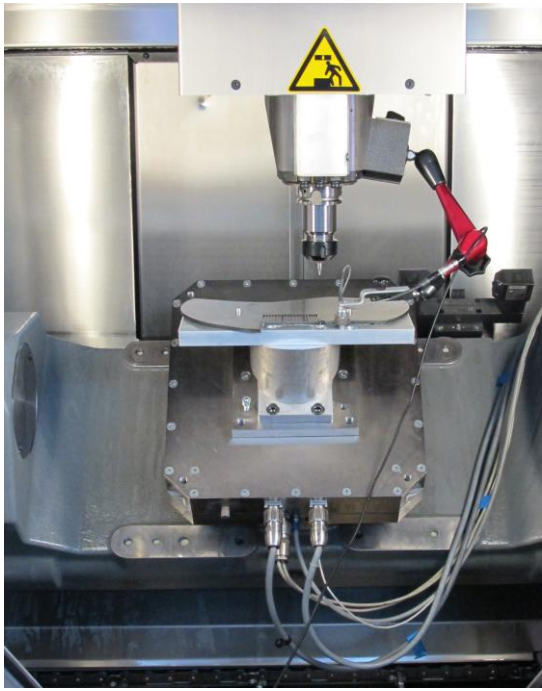

Outline

Machining tests in SiSiC

Workpiece material: SiSiC
full slot machining

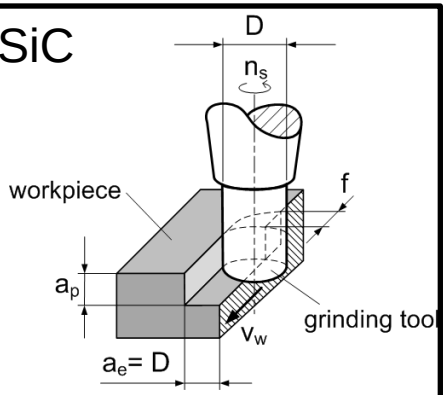

Tool: mounted point, galvanic bond

diameter	D = 2 mm	**D = 3 mm**
thickness	x = 0,7 mm	**x = 1 mm**
grain	D64	**D107**
concentration	C200	**C200**
shape	code 6	**code 8**

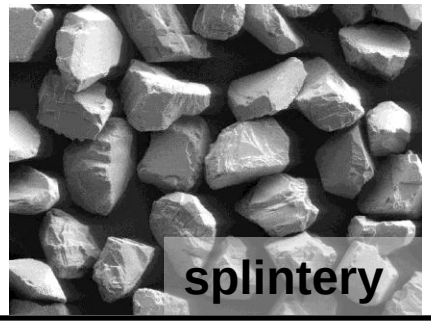

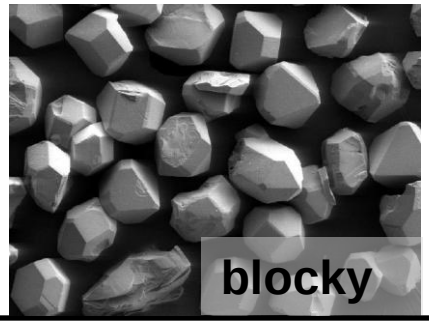

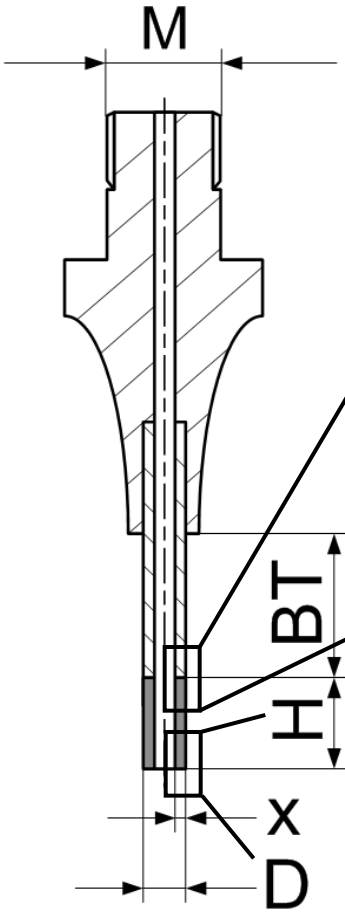

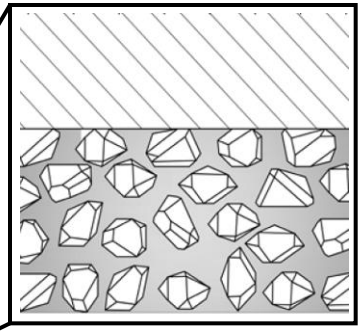

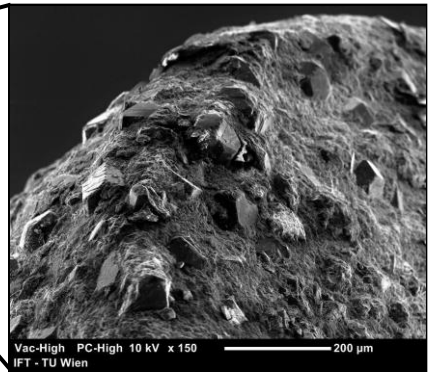

Experimental setup

2D-vibration

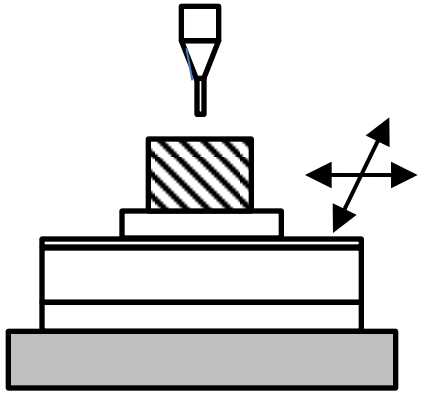

2D-mode shapes examples

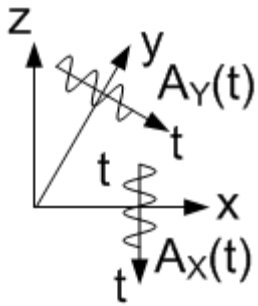

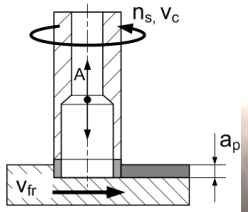

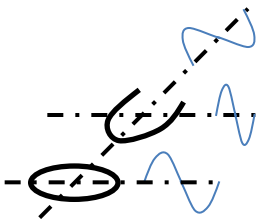

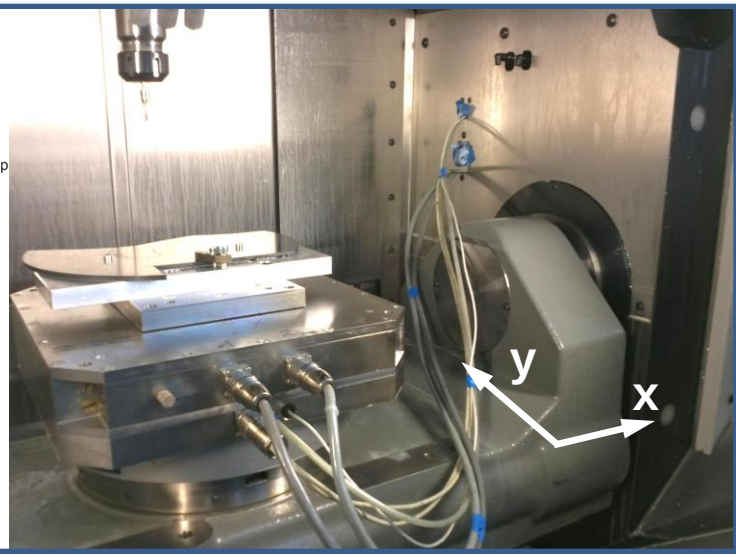

3D-vibration: coupling via angular arrangement

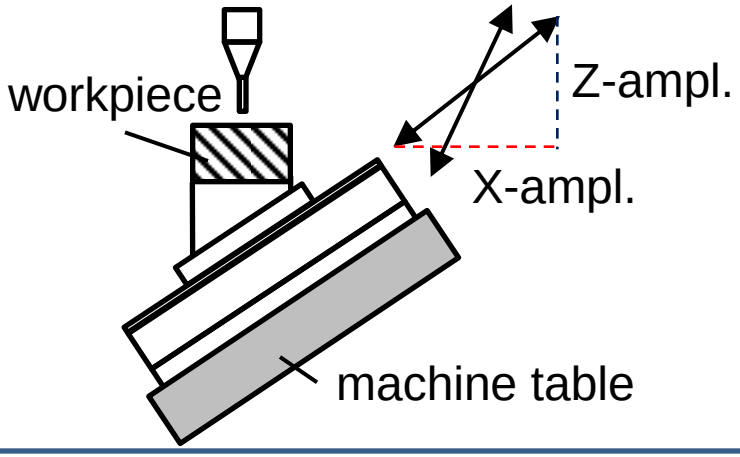

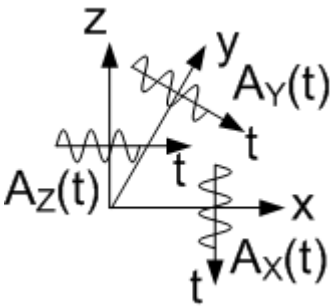

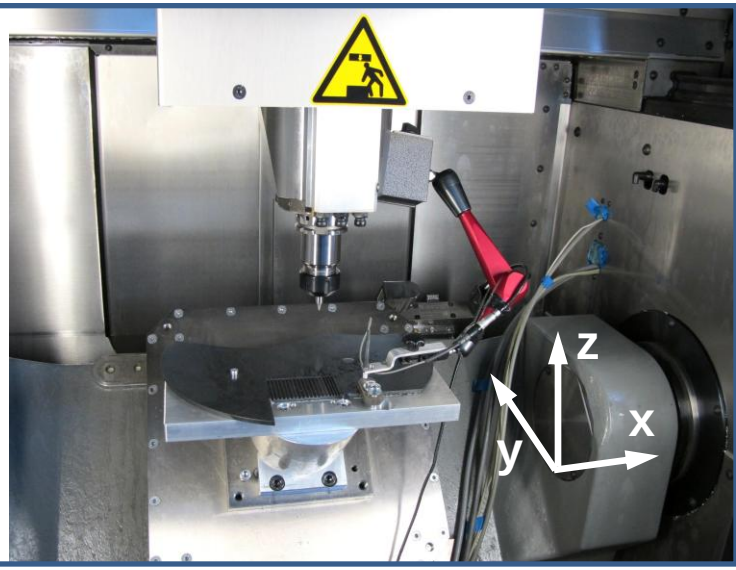

Machining SiSiC - wear behavior

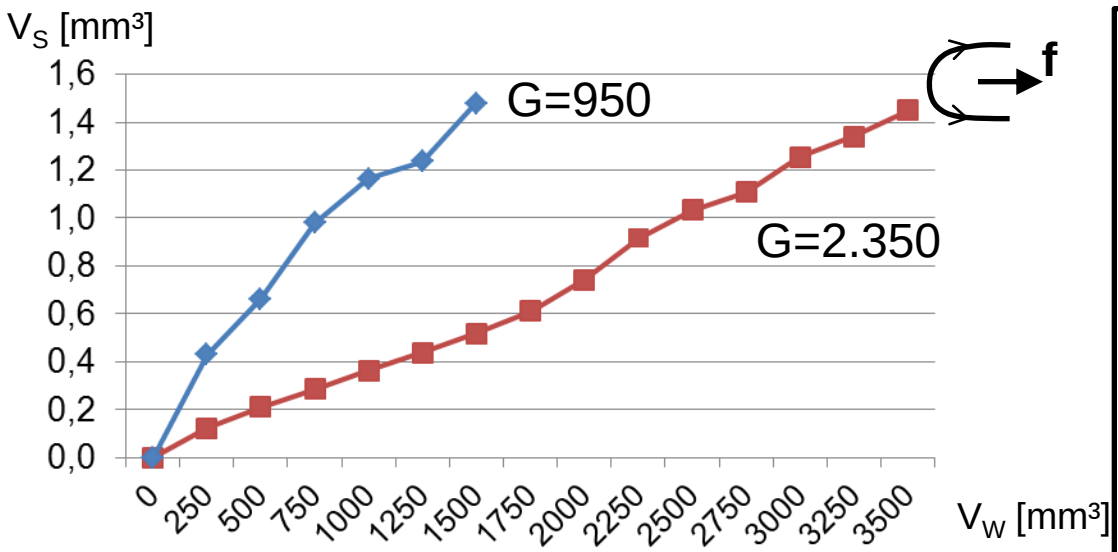

without vibration

3D-U-vibration, angular orientation 45°

frequency/amplitude(P-P) in X	107 Hz/12µm
frequency/amplitude(P-P) in Y	214 Hz/7µm
frequency/amplitude(P-P) in Z	214 Hz/7µm
phase shift vibration X and Y	270°

Tool-nr. 2

D = 3 mm, 8D107, C200
a_p = 0,02 mm
a_e = 3 mm
v_w = 360 mm/min
v_c = 75,5 m/min
n_s = 8.000U/min
coolant: emulsion, 60 bar

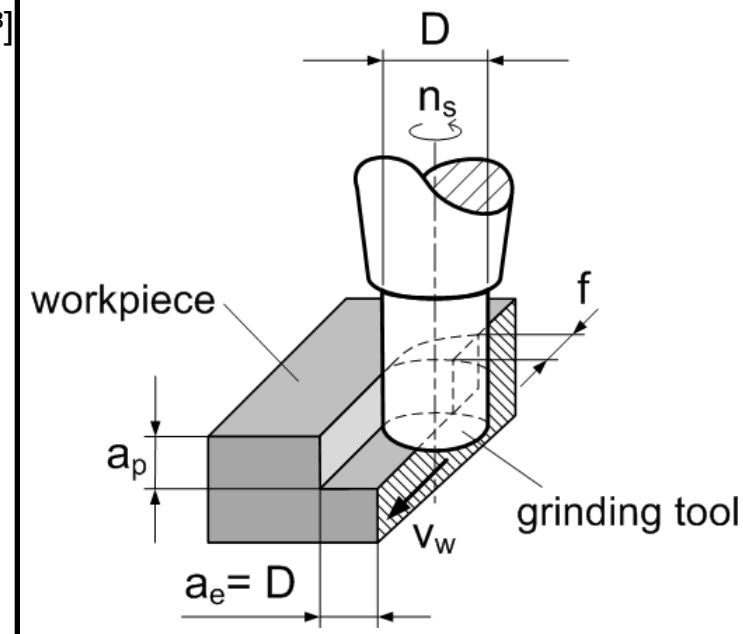

Chip breaking in duplex steel - preliminary test

workpiece surface

turning operation on machining center, f = 178 Hz, A = 10 µm, cir.

material X2CrNiMoN22-5-3, D = 76,4 mm

tool HC - CVD

cutting speed v_c = 60 m/min feed rate f = 0,05mm

cutting depth a_p = 0,2 mm

Outline

Summary/Outlook

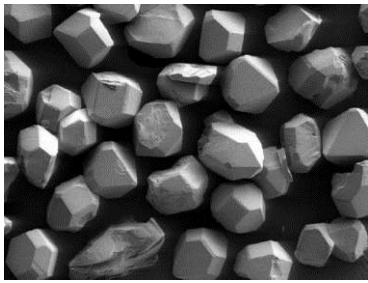

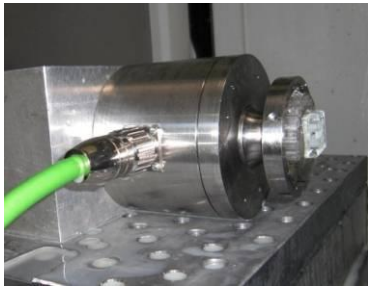

Use of multiaxial-vibration assisted machining:

- application specific adaption of vibration by 2D / 3D
- significant increase of tool life with vibration assisted machining in SiSiC
- improvements in chip formation and flushing

Continuative research work:

- use in machining of metallic materials
- optimization of active amplitude control