Cell Balancing of a Multi-Cell Battery Storage System for Renewable Energy DC Micro-Grids

Helmut L. Votzi and Hans Ertl,
Power Electronics Section, Vienna University of Technology, Austria
helmut.votzi@tuwien.ac.at

Abstract

The paper analyzes different concepts for active charge balancing for a multi-cell battery energy storage system used as a backbone for a DC micro grid. The storage system is based on a cascaded multi-level converter topology where each (lead-acid) battery is equipped with dedicated low-voltage buck type DC/DC converter stage placed directly at the battery terminals. To minimize the output ripple, the cells are operated in a phase-shifted PWM manner. For active charge balancing of the individual battery cells first a simple P-type control scheme is developed showing good balancing characteristic provided that the batteries show almost equal Ah capacity. In case of significant different capacity Ah ratings (which may appear in practice if some batteries of the storage unit are in a weak life-cycle condition) the P-type balancing is not further applicable because a tremendous rise of the output ripple takes place. The P-type balancing therefore is extended/replaced by a concept where weak cells periodically completely are taken out of operation for specific time intervals. For this, a dynamically reconfigurable PWM generation unit is required which is implemented fully digital using a FPGA device. It is demonstrated that the proposed concept shows proper balancing behaviour, low output ripple and allows maximum battery utilization.

1. Introduction

In future battery energy storage systems (BESS) will play an important role for power flow smoothening in renewable energy systems or as a backbone system in micro grids. Furthermore, local DC grids increasingly are proposed for an efficient and reliable electric power supply in smart buildings driven by the DC origin of the majority of today's electrical loads (computers, TV sets, lighting equipment, chargers, power supplies, etc.) [1, 2]. BESS for DC grids commonly are realized in a manner that a string of individual battery cells forms a DC source (typ. 300V…1kV) supplying a bidirectional converter (e.g., an IGBT bridge arrangement) which feeds the DC grid. Such converters, however, are characterized by a rather low switching frequency (typ. 5-20kHz) and a moderate efficiency, especially for partial load due to the IGBT's non-ohmic on-state characteristic. Because the batteries directly are arranged in series forming a unique input voltage for the IGBT converter specific additional hardware measures for charge balancing of the battery cells are required.

Recently, an interesting alternative based on a cascaded half-bridge topology has been proposed [3] which is characterized by (i) very high efficiency, particularly also for partial load condition, (ii) low filtering efforts due to high effective switching frequency, (iii) excellent peak power capability and, in especial, (iv) an "implicit" possibility for charge balancing. Each battery pack is equipped with a dedicated converter circuitry; hence the total load power can be partitioned independently to the individual converter/battery cells by proper duty cycle adjustment/control. This allows that, e.g., also in case of different ageing stage of the batteries (i.e., different actual charge capacity) all batteries achieve the end-of-discharge voltage level simultaneously, giving maximum BESS utilization. As will be demonstrated in section 4 a battery voltage balancing based on individual P-/PI-type control will be adequate, in case of pronounced different battery capacity rate, however, a full cell deactivation (requiring a dynamically reconfiguration of the PWM generator) is preferable (cf. section 5).

ISBN 978-3-8007-3431-3

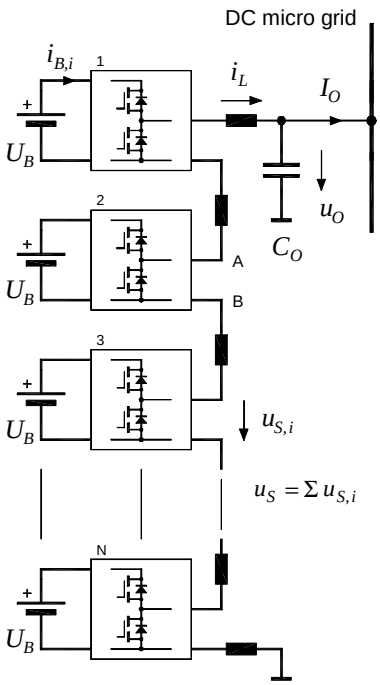

Fig.1: BESS consisting of a series arrangement of individual battery/ converter cells.

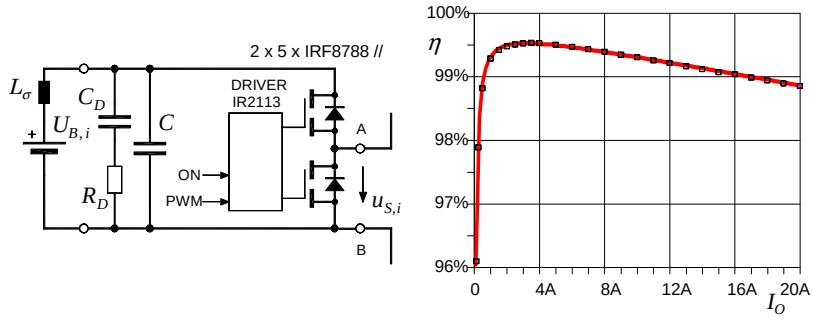

Fig.2: Single converter/battery cell and measured efficiency η in dependency on the output current (smoothing inductor not included).

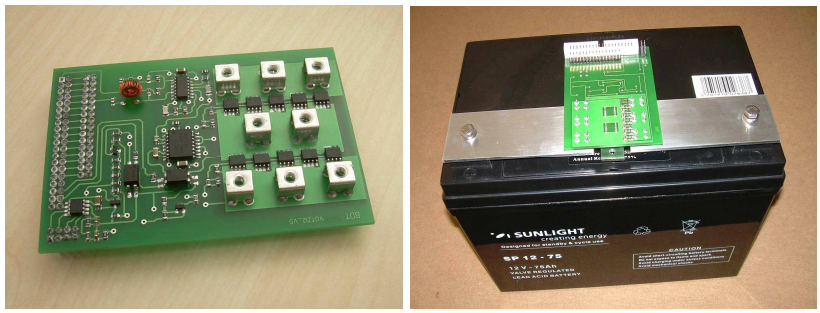

Fig.3: Implemented converter module; left: DC/DC converter PCB showing 2x5xSO8 MOSFETs, driver and terminals; right: PCB module mounted (upside-down) directly on top of lead-acid battery.

2. BESS Basic Operation

The BESS shown in Fig.1 is formed by a series arrangement of N cells based on 12…24V gel-type lead-acid batteries. Each cell contains a buck converter formed by MOSFETs in half-bridge configuration. Due to the low operating voltage provided by the battery low-voltage power MOSFETs can be used for the half-bridge. These semiconductors are available with $R_{DS,ON}$-rates of few mΩ at very low cost resulting in high efficiency rates (99%+) especially also in the partial load region due to the ohmic characteristic of the MOSFET. The converter cells are operated in an interleaved PWM mode, resulting in an effective switching frequency $N \cdot f_S$. This “ripple cancellation” substantially reduces the filtering effort such that a rather low MOSFET switching frequency f_S is sufficient minimizing the switching losses.

The measurements taken from the laboratory prototype demonstrate excellent efficiency (cf. Fig.2, parameters: U_B=14V, duty cycle d=0.75, f_S=1kHz); η > 99% is valid within a wide load range. Due to the minimized switching and driver losses η = 96% is achieved even in case of 1% load. On the contrary in case of full load operation (20A) the losses are in a region (≈2W) that they can be dissipated easily by the PCB (Fig.3, left) and the attached battery terminal bars. For minimizing the wiring losses and the stray inductance between battery and switching cell, the converter is located directly on top of the battery connecting their terminals by aluminum bus bars (Fig.3, right). Remark: The η-curve given in Fig.2 does not include cell-to-cell wiring, filtering and also not the battery efficiency itself.)

In the idealized case all cells are gated using a unique duty-cycle d predefined by the output current controller [3] according to the control law $U_O = N \cdot U_B \cdot d$. With this the total output power equally is shared to the cells. A real system, however, may show different Ah-ratings or charging states of the batteries, hence an additional control is required for equalizing the individual battery voltages. This can be achieved such that the “basic” duty cycle d is modified for each cell ($d \rightarrow d_i = d + \Delta d_i$, i=1…N). This modification, however, on the other hand should kept small, because it increases the ripple by disturbing the interleaved PWM.

3. Battery Issues

A serious problem of all systems with a series arrangement of batteries is that the batteries may be in different state-of-charge and, furthermore, even in different state-of-health/state-of-life-cycle (i.e. that the batteries may show different Ah-ratings). Even for equal nominal Ah-ratings some batteries may be "weak" and/or in different ageing status if partially renewed. In case of different Ah-ratings, however, the control system has to reduce the load of weak batteries and compensate this by increasing the load of "sound" cells to achieve maximum battery utilization. On the DC grid side all converters however show equal load current I_O. The battery load current $I_{B,i}=d_i \cdot I_O$ therefore can only be reduced by lowering the duty cycle d_i. If a BESS is characterized by battery packs of say 2:1 Ah-ratings, this will result also in a 2:1 variation of d_i, substantially disturbing the ripple reduction such that the standard interleaved PWM operation may not be adequate. It has to be therefore clarified, which variations in the Ah-ratings have to be expected in a real system.

It is defined in different standards like EN60896 that batteries reach their end of economic usability at 80% of their rated capacity. That means that a BESS could contain batteries with different capacities between nearly 100% and 80% or even beneath if exhausted batteries are not changed immediately. If the system is used in a conventional topology (direct series connection of battery packs, equal load current) the situation occurs that without specific balancing measures a single "weak" battery will affect the storage capacity of the whole system. Using the proposed topology this drawback can be avoided by proper control, no additional power electronics hardware is required. However, increased ripple by duty cycle variations of about 20% has to be expected.

Due to the used buck converter topology pulse-shaped battery currents appear (the DC link capacitor/snubber shown in Fig.2 does not act as a pulse-frequency averaging filter but is for limiting the MOSFET's voltage stress respectively for damping the parasitic resonance circuit formed by the stray inductance L_σ of battery and wiring). It might be noted, that the 1kHz pulse current has a negative effect on the battery. As described in [4, 5] however, pulsed battery currents even may slightly increase the charge utilization of rechargeable batteries, especially if the currents are in the kHz-region. The described effect could be verified by a simple testing arrangement according to Fig.4. Pulse shaped battery discharge currents (of equal average value) indeed result in a somewhat increased usable charge (here ~6Ah instead of ~5.7Ah for continuous current discharge).

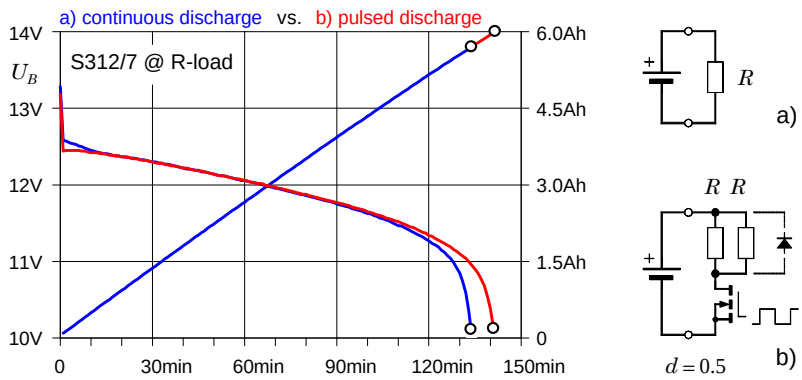

Fig.4: Discharge characteristic of a 12V/7Ah sealed gel-type lead-acid battery (Exide S312/7) for a) continuous discharge (R=4.7Ω) and for b) pulsed discharge (R=2x4.7Ω in parallel at 50% duty cycle) resulting in a slightly (~5%) increased usable charge.

4. Balancing Strategies (P- and PI-type Balancing)

The "basic" (inner) control loop of a BESS is the current control defining output current I_O to the grid according a reference value I_{ref}, specified, e.g., by a superimposed energy management system. As current controller G_I often a simple P-type stage may be sufficient, especially if a proper output voltage feed-forward element k_{ff} is implemented. The dynamic

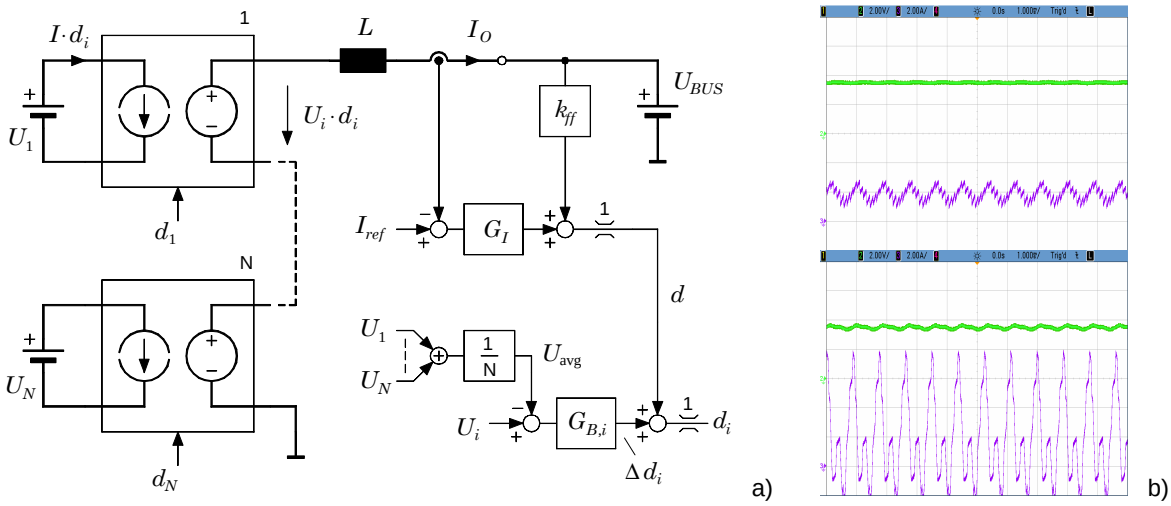

Fig.5: (a) BESS control structure including battery balancing; (b) output current curve (magenta) for almost equal Ah-ratings (top), and large ripple in case of batteries of deep weak state (bottom).

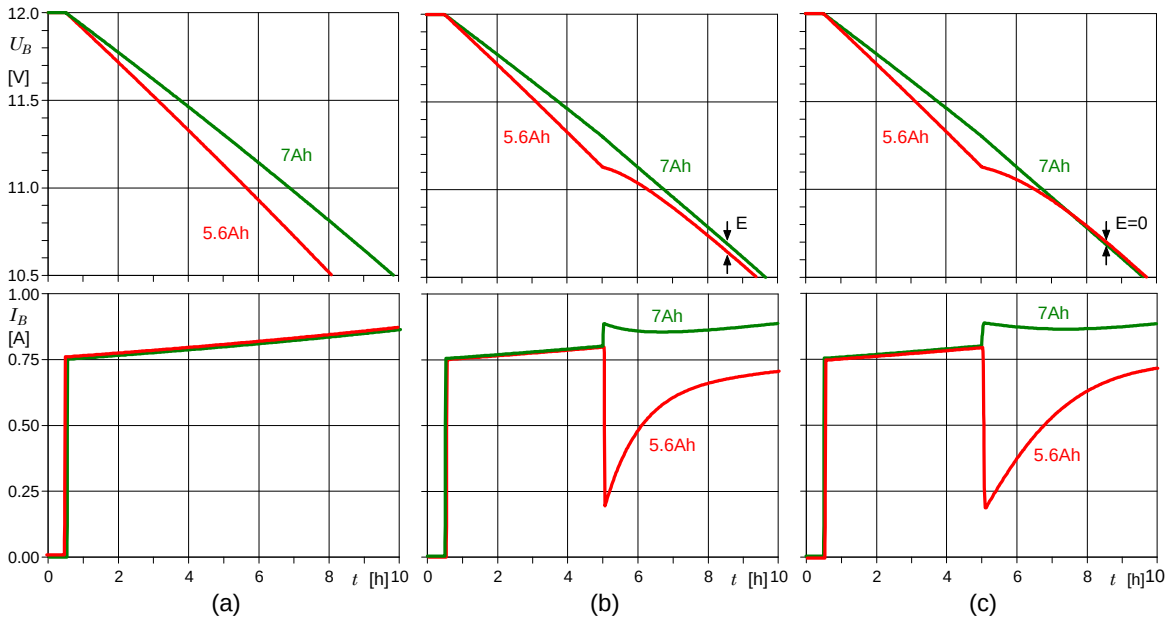

Fig.6: Top: Battery voltage of a weak (80%, red) and a "sound" (100%, green) cell; (a): no balancer, (b): P-type balancer (stationary balancing error E), (c): PI-type balancer avoiding stationary error E; activation of balancer for demonstration purpose at t=5h. Bottom: According battery currents; non-switching PSpice simulation.

behavior of the current control usually is very fast as compared to battery charge/discharge such that the current control is not treated further on here and $I_O = I_{ref}$ shall be assumed. The current controller also defines the basic converter duty cycle d.

For battery voltage balancing now as a first approach also a P-type control ($G_B=k_P$) shall be tested. Therefore, as shown in to Fig.5a, an "average" battery voltage is calculated $U_{avg} = \Sigma U_i/N$. Subsequently, the basic duty cycle d (generated by the current controller) is modified according to $\Delta d_i = k_P \cdot (U_i - U_{avg})$. As depicted by the simulation of Fig.6, the P-type scheme (activated at t=5h for demonstration) gives proper balancing characteristic for a system where the batteries show almost equal Ah-ratings. If, however, one or several batteries are in a deep weak state (e.g., <50% of rated Ah-capacity), the P-type balancing in principle has to end up with rather high individual Δd_i rates. As a consequence the converter cells operate at largely different duty cycles which tremendously disturb the interleaved PWM modulation resulting in unacceptable high output ripple currents (Fig.5b).

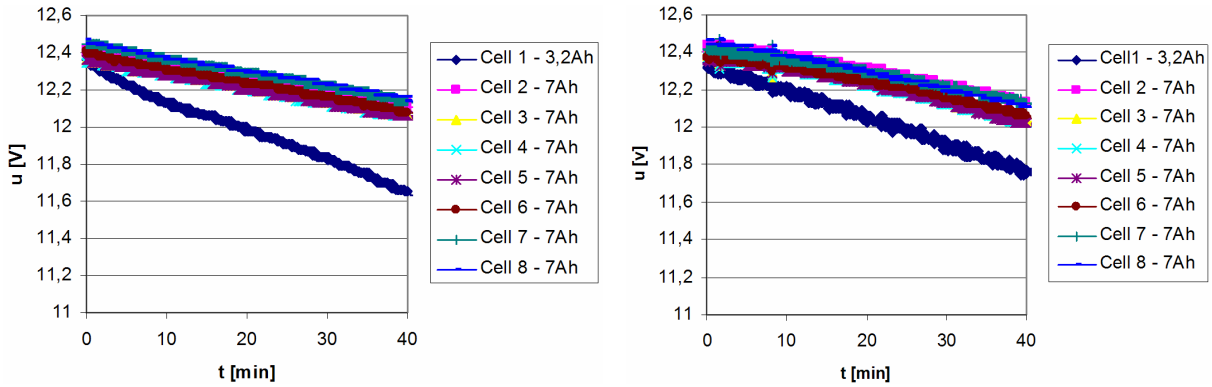

Fig.7: Cell voltages for a BESS consisting of N=8 cells; 7 cells with 7Ah, single weak cell with 3.2Ah. Left: system without any balancing measures. Right: P-type balancer with low balancing gain k_P to limit the appearing ripple.

A characteristic being typical for the P-type balancer is that there is a stationary control error which is small but causes some drawback because the weak battery reaches its end-of-discharge voltage slightly earlier (Fig.6b, top). This could be improved if the P-type balancer is extended to a PI-structure avoiding stationary control errors. The perfect voltage balancing of the PI-structure (Fig.6c) would be attractive; the actual improvement as compared to the P-type balancer however is limited. In the real system a compromise between complexity and benefit has to be accepted, hence a P-type balancing is implemented. A PI-type controller would require significant higher amount of additional logic blocks in the control FPGA which is used for implementation of the PWM generator, the current controller and the balancing circuitry. (Within each converter cell there is a small low-cost micro-controller for battery voltage measuring. All controllers transmit the voltage values to the FPGA by an opto-isolated 2-wire data bus, [3].) It should be noted, that the PI-balancer has also the drawback that it disturbs the interleaved PWM resulting in similar high output ripple.

In Fig.7 measurement results showing individual cell voltages are illustrated (balancer permanently activated, right; left: without balancing). In this testing configuration the system was operated with 7 cells with a nominal capacity of 7Ah and a single substantially “weak” cell emulated by a 3.2Ah (=46%) battery. (It has to be mentioned that also the 7Ah cells show a slightly different aging status and unfortunately also different initial charging status.) The nominal output voltage of the whole system (8 cells, d=0.75) is 72 volts with a load current adjusted to 1.75A. The P-type balancer is used, the gain k_P however has to be chosen rather low (causing an accordingly balancing error) for limiting PWM distortion. Nevertheless, after about 40min the test has to be stopped because the ripple current got as high as a regular safe operation mode was not possible any more. The effect somewhat could be mitigated by enhancing the filtering, however the P-type structure in its basic form seems to be not sufficient for balancing in case of batteries showing severe different Ah-rating.

5. Dynamically Cell Deactivation and PWM Reconfiguration

To solve the problem of the high ripple currents caused by different duty-cycles an extension of the P-type balancing has been developed which is based on the idea that cells with weak batteries periodically completely are taken out of operation for specific time intervals (adopting the duty cycle of the residual cells). To guarantee an ideally interleaved PMW mode, an “adaptive” PWM modulator is required, which allows a dynamical change of the cell quantity (e.g., a “smooth” transition from N=8 to N=7 and vice versa). This is achieved by a fully digital PWM generation based on a reconfigurable FPGA (see gating signals Fig.8). The operation (on/off) control of the cells is based on the cell’s battery voltage U_i (again in comparison to the average voltage U_{avg}) using an on/off hysteresis control.

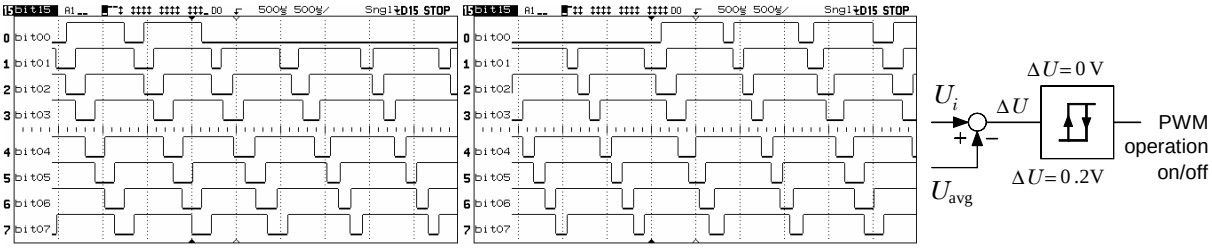

Fig.8: PWM signals of reconfigurable digital interleaved PWM modulator. “Seamless” transition from N=8 to N=7 converter cells (left) and vice versa (right). Also shown: Cell’s PWM on/off control concept (FPGA realization).

Fig.9: Cell deactivation with dynamic PWM reconfiguration. Top trace (green): output voltage (20V/div); bottom trace (magenta): ripple current signals of reconfigurable interleaved digital PWM modulator. Transition from N=8 to N=7 converter cells without significant increase of the current ripple.

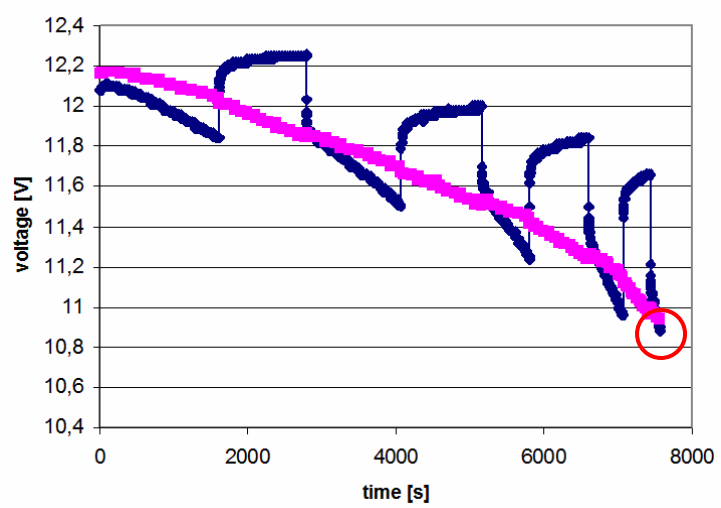

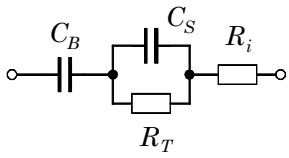

Fig.10: Left: Balancing characteristic with dynamically cell deactivation (full discharge cycle). Magenta curve: Continuous discharge of a “sound” battery (7Ah capacity), blue curve: Intermitted discharge of the “weak” battery (3.2Ah). Both batteries simultaneously reach their end-of-discharge voltage level (marked by red circle). Top: Randles battery model.

As indicated in Fig.9, due to the reconfiguration of the interleaved PWM the stationary output current ripple only very slightly increases if a weak converter cell is taken out of operation with the proposed concept. The developed PWM generator would allow the deactivation of several converter cells supporting still optimal interleaved PWM. Remark: It has to be kept in mind, however, that the voltage contribution of a deactivated cell has to be carried by the still active cells to maintain the DC voltage of the micro grid (buck converter topology). Because the basic duty cycle typically is in a range 0.7…0.8, the deactivation is limited to about 20…30% of the cell count N. If this is valid, however, as demonstrated by Fig.10 a very good battery utilization can be achieved. A system consisting of 7 “sound” (i.e., capacity 7Ah) batteries and one “weak” (3.2Ah) battery achieves the end-of-discharge voltage level simultaneously for all batteries. It is interesting that the proposed scheme finally leads to an intermitted operation of the weak cell. If the cell is taken out of operation, the voltage of a real battery (besides the ohmic voltage drop) recovers to some extent (predicted also by the often used Randles battery model (see, e.g., [6]) formed by a bulk capacitor C_B, a surface capacitance C_S ($C_B >> C_S$) paralleled by R_T such that the battery voltage is affected by a “fast” time constant $C_S \cdot R_T$ such that a control hysteresis (cf. Fig.8 right) is required.

6. Conclusions

In the paper different concepts for active charge (battery voltage) balancing for a multi-cell BESS have been tested. Multi-cell systems usually require rather low filtering effort if they are operated in an interleaved PWM mode. If the batteries of the converter cells show non-uniform storage capacity the individual cells have to be operated at different duty cycles if maximum energy storage utilization shall be achieved (i.e., all cell batteries simultaneously “arrive” at the end-of-discharge voltage level in case of a full discharge cycle). In a first approach the different duty cycles are generated by a P-type balancing controller operating permanently which modifies the basic duty cycle defined by the current controller such, that the average current drawn from the battery normalized to its capacity is equal for all cells. As a consequence of the P-type control a stationary voltage balancing error appears which could be avoided if the P-control is extended to a PI-type characteristic (which, however, would cause a specific additional effort in the FPGA implementation).

The mentioned basic balancing (P- or PI-type) seems to be sufficient if the battery capacities of the BESS vary within typically 80…100%. For higher deviations of the battery Ah-rating the duty cycle variations (according the operating principle) of the basic balancing substantially disturb the harmonic cancellation of the interleaved PWM, hence an unacceptable high output current ripple appears. This can be avoided if cells with weak batteries are completely taken out of operation. Therefore, a fully digital PWM generator has been developed which performs a basic P-type balancing but furthermore enables a dynamically reconfiguring, i.e., dedicated cells can be switched off whereas the residual cells still are operated in optimum interleaved PWM.

7. Literature

[1] Y. Ito, Y. Zhongqing, H. Akagi: "DC Microgrid Based Distribution Power Generation System", 4th International Power Electronics and Motion Control Conference (IPEMC'04), Aug. 14-16, Xi 'an, China, Vol. 3, pp. 1740-1745, 2004.

[2] H. Kakigano, M. Nomura, T. Ise: "Loss Evaluation of DC Distribution for Residential Houses Compared with AC System", Int. Power Electronics Conf. (IPEC 2010), Sapporo, Japan, June 2010

[3] H. L. Votzi, H. Ertl: “High-Efficiency Battery Storage Unit for Renewable Energy DC Micro-Grids”, PCIM 2011, Nürnberg, Germany, May 2011.

[4] C. F. Chiasserini, Ramesh R. Rao: "Pulsed Battery Discharge in Communication Devices", Proc. of Mobicom ’99, Seattle, USA, August 1999.

[5] K. S. Ng, C. S. Moo, Y. C. Lin, Y. C. Hsieh, and Y. L. Tsai: "Intermitted Discharging for Lead-Acid Batteries", Power Conversion Conference PCC’07, Nagoya, Japan, April 2007.

[6] A. J. Fairweather, M. P. Foster, D. A. Stone: "VRLA Battery Parameter Identification using Pseudo Random Binary Sequences (PRBS) ", 5th IET International Conference on Power Electronics, Machines and Drives (PEMD 2010), Brighton, UK, April 2010.