One-Quadrant DC Motor Drive with Nonlinear Step-Up-Down Characteristics

Felix, Himmelstoss, University of Applied Science Technikum Wien, Austria, felix.himmelstoss@technikum-wien.at

Karl, Edelmoser, University of Technology Vienna, Austria, karl.edelmoser@tuwien.ac.at

Abstract

DC drives are still very important, especially for low voltages and low power (e.g. in cars and robots). In this paper a converter is analyzed, which makes it possible to control the voltage across the machine (and therefore the speed) from zero to more than two times the input voltage with a nonlinear, flat dependence at low duty cycles. This enables one to achieve high torque at low speeds with better efficiency and also higher speeds for duty cycles higher than about two-thirds. The circuit is explained, the model of the drive, the design of the devices, and some experimental results are given.

1. Introduction

There exists a comprehensive treatment of DC motor drives and switched mode power supplies in the textbooks e.g. [1 till 8] and there are numerous papers in conference proceedings and journals, too. At start-up DC motors need low voltages and high currents. Sometimes we need high torques at low speed over a longer period and sometimes high speeds are needed, but have only a relative low voltage (battery or fuel cells) at hand. The here proposed converter [9] solves both problems. The output voltage can be calculated according to the square of the duty cycle (the duty cycle d is defined by the on-time of the active switch of the converter divided by the switching period) divided by one minus the duty cycle multiplied by the input voltage (cf. (4)). Fig. 1 shows the converter driving a permanent exited motor. Here the motor is modelled by a series connection of the armature resistor R_{LA}, the armature inductor L_A, and the source voltage $(C_E \cdot n)$, which is dependent on the speed.

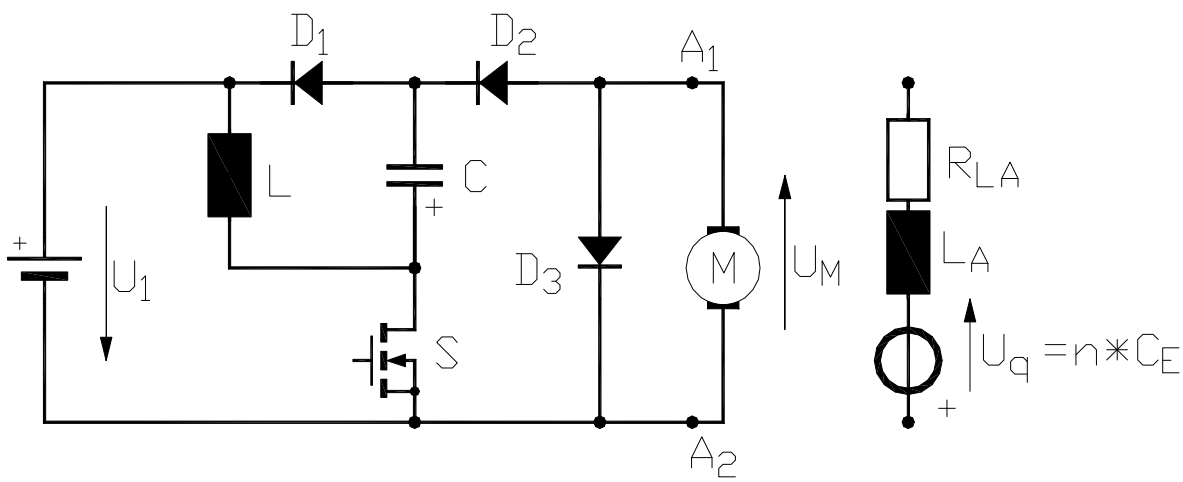

Fig. 1. Converter with DC motor

The converter is especially useful when low speed with high torque is in demand and also when higher speeds are sometimes necessary. It can also be used as battery charger or in electrochemical process engineering. In these cases the current in LA has to be controlled, and the source voltage represents here the voltage of the battery.

2. Stationary analysis

For the basic analyses ideal elements (that means no parasitic resistors, no switching losses) are used. The converter works in continuous mode and is in steady (stationary) state condition. In the continuous mode we have two states. In state 1 (Fig. 2.a) the transistor switch S is turned on and the diode D2 is also conducting (as we need the equivalent circuits later for calculating the dynamic model of the drive, the loss resistors and the forward voltage of the diodes are included in the circuit diagrams). When the transistor S is turned off, the circuit is in stage 2. Now the diodes D1 and D3 are conducting (Fig. 2.b).

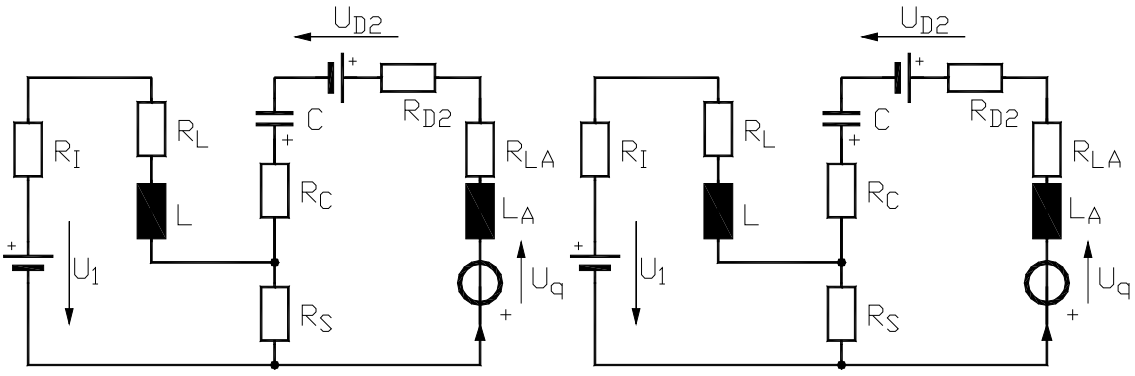

Fig. 2. a. State 1, b. state 2

2.1. Speed of the Motor, Voltage Transformation Rate

To calculate the voltage transformation rate, the voltage across the inductors has to be considered. During the on-time of switch S the voltage across inductor L is U_1. When switch S is turned off, the current through L freewheels through diode D1. The voltage across the coil L is therefore $-U_C$. (Here, the capacitor is assumed so large, that the voltage can be regarded constant during a pulse period.) As for the stationary case, the absolute values of the voltage-time areas of the inductors have to be equal (the voltage across the inductor has to be zero in the average), one can write

$$(U_1)\cdot d = U_C \cdot (1-d)\ . \tag{1}$$

In state one the voltage across the motor inductor is $(U_C - C_E \cdot n)$ and during the turn-off time it is the negative source voltage. The voltage-time balance is therefore

$$(U_C - C_E \cdot n)\cdot d = C_E \cdot n \cdot (1-d)\ . \tag{2}$$

The speed can now be calculated according to

$$n = \frac{1}{C_E} \cdot \frac{d^2}{1-d} \cdot U_1 \ . \tag{3}$$

The speed is proportional to the voltage transformation rate, which is the square of the duty cycle divided by one minus the duty cycle. The mean value of the pulsed output voltage of the converter (between A1 and A2) is

$$\overline{U}_2 = \frac{d^2}{1-d} \cdot U_1 \ . \tag{4}$$

Fig. 3 shows the voltage transformation rate of the normal buck-boost converter (triangle) and the buck converter (rhomb) (e.g. [1, 3]), the here described converter (x) and a buck converter with quadratic transformation rate as described in [10].

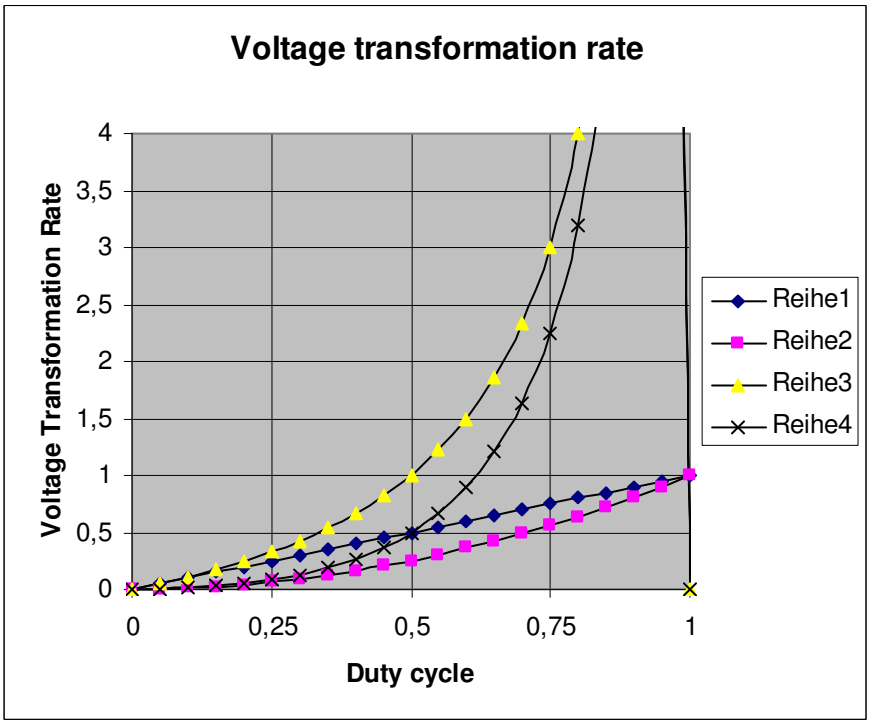

Fig. 3. Voltage transformation rate for D/(1-D)-, D*D/(1-D)-, D-, D*D-converter

2.2. Interrelationship of the Currents

An interrelation for the current through the inductors can be derived based on the equality of the absolute values of the current-time-areas of the capacitor during on- and off-times of the active switch S1. Fig. 4 is a sketch of the current through the capacitor. As the armature inductor LA is very large compared to the converter inductor L, the current ripple through the machine is nearly zero. With the steady state value of motor current I_{LA} we get for the average value of the inductor current $\bar{I}_L$ (c.f. Fig. 4)

$$d \cdot I_{LA} = (1-d) \cdot \bar{I}_L \ . \tag{4}$$

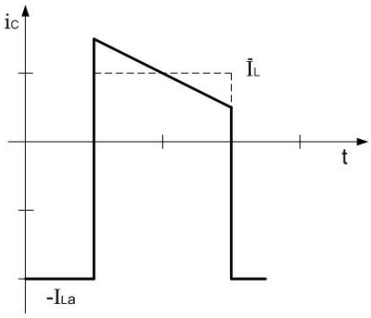

Fig. 4. Current through the capacitor

2.3. Voltage Stress of the Devices

The voltage across the switch has its maximum value when the switch is turned off and D1 is conducting. By inspection we get (and also for the blocking voltage of D1)

$$U_S = |U_{D1}| = U_C + U_1 \ . \tag{5}$$

The maximum blocking voltage across D2 is achieved during the off-time of the active switch and is equal to the input voltage U_1. The voltage stress across D3 appears when the active switch is on and is equal to the capacitor voltage.

With

$$d = \frac{U_2}{2U_1}\left[\sqrt{1+\frac{4U_1}{U_2}}-1\right] \tag{6}$$

and

$$U_C = \frac{d}{1-d} \cdot U_1 , \tag{7}$$

one can calculate the interrelationships between the input U1 and the output voltage U2 and the blocking voltages of the semiconductors according to

$$U_S = |U_{D1}| = \frac{2U_1^{\ 2}}{2U_1 - U_2\left[\sqrt{1+\frac{4U_1}{U_2}}-1\right]} , \tag{8}$$

$$|U_{D2}| = U_1 , \tag{9}$$

$$|U_{D3}| = \frac{U_1 \cdot U_2 \cdot \left[\sqrt{1+\frac{4U_1}{U_2}}-1\right]}{2U_1 - U_2 \cdot \left[\sqrt{1+\frac{4U_1}{U_2}}-1\right]} . \tag{10}$$

With a security factor of 1.3 up to 2 (depending on the application) one can determine the necessary voltages of the semiconductor devices.

3. Dynamic Analysis

3.1. Describing Equations

Only a model with loss resistances gives good consistency with practical experiments and describes the dynamic correctly. From Kirchhoff's laws and Newton's dynamic law the equations for state 1 (Fig. 2.a) are obtained according to

$$\frac{di_L}{dt} = \frac{-i_{LA} \cdot R_S + -i_L \cdot (R_i + R_L + R_S) + u_1}{L_1}, \tag{11}$$

$$\frac{di_{LA}}{dt} = \frac{-i_{LA}(R_A + R_C + R_{D2} + R_S) - i_L(R_S) + u_C - V_{D2} - c_e \cdot n}{L_A}, \tag{12}$$

$$\frac{du_c}{dt} = \frac{-i_{LA}}{C}, \tag{13}$$

$$\frac{dn}{dt} = \frac{c_m \cdot i_{LA} - m_L}{2\pi J}. \tag{14}$$

During the interval T_{off} the equivalent circuit of Fig. 2.b is valid; the corresponding equations are

$$\frac{di_L}{dt} = \frac{-i_L(R_{D1} + R_C + R_L) - u_c - V_{D1}}{L}, \tag{15}$$

$$\frac{di_{LA}}{dt} = \frac{-i_{LA}(R_A + R_{D3}) - V_{D3} - c_e \cdot n}{L_A}, \tag{16}$$

$$\frac{du_c}{dt} = \frac{i_L}{C_1}. \tag{17}$$

The mechanical equation is the same as in state 1 (14).

3.2. Large Signal Model

Under the condition that the system time constants are large compared to the switching period, we can combine these two sets of equations (11, 12, 13, 14) (15, 16, 17, 8) by weighting them with the duty cycle. The fixed forward voltage of the diode (the diode is modeled as a fixed forward voltage V_D and an additional voltage drop depending on the differential resistor R_D of the diode) is included an additional vector with the fixed forward voltages V_{Di}. The other parasitic resistances are the on-resistance of the active switch R_S, the series resistance of the converter inductor coil R_L, the resistance of the machine R_A, and the series resistor of the capacitor R_C

$$\frac{d}{dt}\begin{pmatrix} i_L \\ i_{LA} \\ u_c \\ n \end{pmatrix} = \begin{bmatrix} -\frac{R_L + d(R_i + R_S) + (R_C + R_{D1})(1-d)}{L} & -\frac{dR_S}{L} & \frac{d-1}{L} & 0 \\ -\frac{R_S d}{L_A} & -\frac{R_A + (R_C + R_{D2} + R_S)d + R_{D3}(1-d)}{L_A} & \frac{d}{L_A} & -\frac{Ce}{L_A} \\ \frac{d-1}{C} & \frac{d}{C} & 0 & 0 \\ 0 & \frac{Cm}{2\pi J} & 0 & 0 \end{bmatrix} \cdot \begin{pmatrix} i_L \\ i_{LA} \\ u_C \\ n \end{pmatrix} + \quad . \quad (18)$$

$$+ \begin{bmatrix} \frac{d}{L} & 0 \\ 0 & 0 \\ 0 & 0 \\ 0 & -\frac{Cm}{2\pi J} \end{bmatrix} \begin{pmatrix} u_1 \\ m_L \end{pmatrix} u_i + \begin{bmatrix} \frac{d-1}{L} & 0 & 0 \\ 0 & -\frac{d}{L_A} & \frac{d-1}{L_A} \\ 0 & 0 & 0 \\ 0 & 0 & 0 \end{bmatrix} \begin{pmatrix} V_{D1} \\ V_{D2} \\ V_{D3} \end{pmatrix} .$$

By the state-space equation (18) the dynamic behavior of the converter is described correctly in the average, thus quickly giving us a general view of the dynamic behavior of the converter. The superimposed ripple (which appears very pronounced in the converter coil) is of no importance for qualifying the dynamic behavior. (The voltage ripple across the capacitors is small, due to the sufficiently large dimensioning of the capacitor.) This model is also appropriate as large-signal model, because no limitations with respect to the signal values have been made.

4. Dimensioning

With Fig. 4 and a chosen voltage ripple

$$\Delta u_C = \frac{1}{C}\int_0^{dT} i_C dt = \frac{I_{LA} \cdot dT}{C} , \quad (19)$$

and a maximum load current $I_{LA,\max}$ the capacitor has to be dimensioned according to

$$C = \frac{I_{LA,\max}}{\Delta u_C \cdot f} \cdot \frac{(\sqrt{5}-1)}{2} \frac{U_2}{U_1} . \quad (20)$$

With the current ripple ΔI_L, the switching period T, and with the equation for the inductor during the on-time of the transistor

$$U_1 = L \cdot \frac{\Delta I_L}{d \cdot T} \quad (21)$$

one can calculate the necessary inductor according to

$$L = \frac{U_1}{\Delta I_L \cdot f} \cdot \frac{(\sqrt{5}-1)}{2} \frac{U_2}{U_1} = \frac{U_1}{\Delta I_L \cdot f} \cdot \frac{(\sqrt{5}-1)}{2} \frac{C_E n}{U_1} . \quad (22)$$

A small converter model was implemented. The transistor is driven by a low side driver. Fig. 9 and Fig. 10 show the voltage across the inductor and the current through the inductor in continuous and discontinuous inductor current mode (mind the typical ringing), respectively.

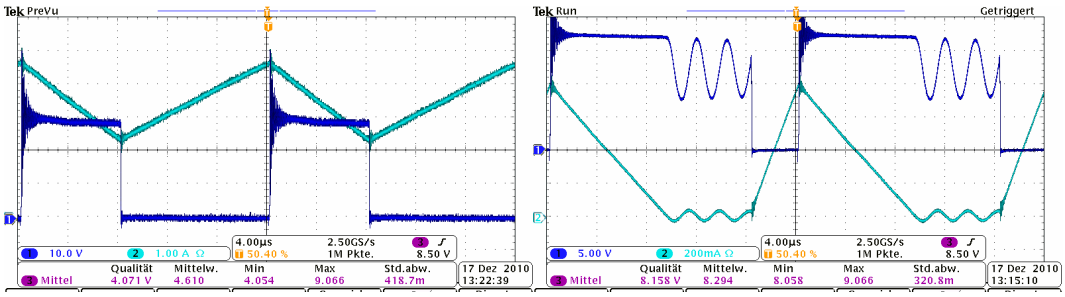

Fig. 5. Voltage across the active switch (Ch1) and current through the inductor (Ch2), a. continuous mode, b. continuous mode

5. Conclusion

DC drives are still very important, especially for low voltages and low power (e.g. in cars and robots). The converter has an interesting voltage transfer rate and needs only one active switch and three passive switches. (All diodes can be shunted by an additional transistor to reduce loss, when efficiency is the most important topic.) The two states in this case are: S1 and the switch parallel D2 are on (state 1), and the switch parallel to D1 and D3 are on (state 2). Now the converter generates a source voltage in the machine, which behaves according to the nonlinear transfer law to the duty cycle. This can especially be useful e.g. in robots or hand-held tools like screwers. The system can be described as a fourth order system. From the control point of view, the time constants are quite different: there is a large time constant caused by the mechanical inertia and due to the armature inductivity a smaller, but still much higher one, compared to the time constant generated by the converter. Cascade control with a slow motion and a fast converter controller is therefore useful. The control and the influence of small parameter values of the converter and the application of sliding mode and bang-bang control will be studied in the future.

6. Literature

[1] Mohan, N., Undeland, T., and Robbins, W.: Power Electronics, Converters, Applications and Design (2nd Ed.), New York: W. P. John Wiley & Sons, 2003.
[2] Basso, C.P.: Switch-Mode Power Supplies, New York: Mc Graw Hill, 2008.
[3] Zach, F., Leistungselektronik, 4.Aufl, Wien: Springer, 2010.
[4] Erickson, R. W., Maksimovic, D.: Fundementals of Power Electronics, New York: Springer, 2001.
[5] Rashid, M. H.: Power Electronics Handbook, Academic Press, 2006.
[6] Emadi, A.: Handbook of Automotive Power Electronics and Motor Drives, Marcel Dekker, 2005.
[7] Middlebrook, R. D., Cuk, S.: Advances in Switched Mode Power Supplies, Vol. 1, Passadena: Teslaco, 1981.
[8] Boldea, I., Tutelea, L.: Electric Machines: Steady State, Transients, and Design with MATLAB, Boca Raton, FL: CRC Press Taylor and Francis Group, 2010.
[9] Himmelstoss, F.: Einquadrantenstellglied für permanent erregte Gleichstrommotoren mit vollem Antriebsmoment bei kleinen Drehzahlen, Austrian Patent AT 508541 B1 filed 2009.
[10] Himmelstoss, F. A., and Amtmann, O.: DC Motor Drive with high Torque at low Speeds, Lisbon, Portugal, April 27-29, 2011 IEEE EUROCON 2011, ISBN: 978-1-4244-7485-1.

Acknowledgment ***The authors are very grateful to the city council of Vienna, which supported the Technikum Wien with new measurement equipment by the project MA 27-Projekt 09-32.***