Pushing IA to the (SNR) Limit: Experimental Results from the Vienna MIMO Testbed

Maxime Guillaud

with Martin Mayer, Gerald Artner, Martin Lerch, Gábor Hannák

Institute of Telecommunications
Vienna University of Technology
Vienna, Austria
guillaud@tuwien.ac.at

Scandinavian Workshop on Testbed-Based Wireless Research
KTH, Stockholm, November 27, 2013

Interference Alignment, Theory vs. Practice

Previous works on IA:

- "simulated" IA [El Ayach,Peters,Heath 2009]
- indoor, Ettus USRPs [Gollakota, Perli, Katabi, 2009]
- indoor, Lyrtech [González, Ramirez, Santamaria et al, 2011]
- indoor, Ettus USRPs [Zetterberg, Moghadam, 2012]

Our objective: investigate the "fundamental" limits of IA

- over-the-air
- using lab-grade equipment
- in a standard-agnostic way

Interference Alignment, Theory vs. Practice

Previous works on IA:

- "simulated" IA [El Ayach,Peters,Heath 2009]
- indoor, Ettus USRPs [Gollakota, Perli, Katabi, 2009]
- indoor, Lyrtech [González, Ramirez, Santamaria et al, 2011]
- indoor, Ettus USRPs [Zetterberg, Moghadam, 2012]

Our objective: investigate the "fundamental" limits of IA

- over-the-air
- using lab-grade equipment
- in a standard-agnostic way

K-user MIMO Interference Channel

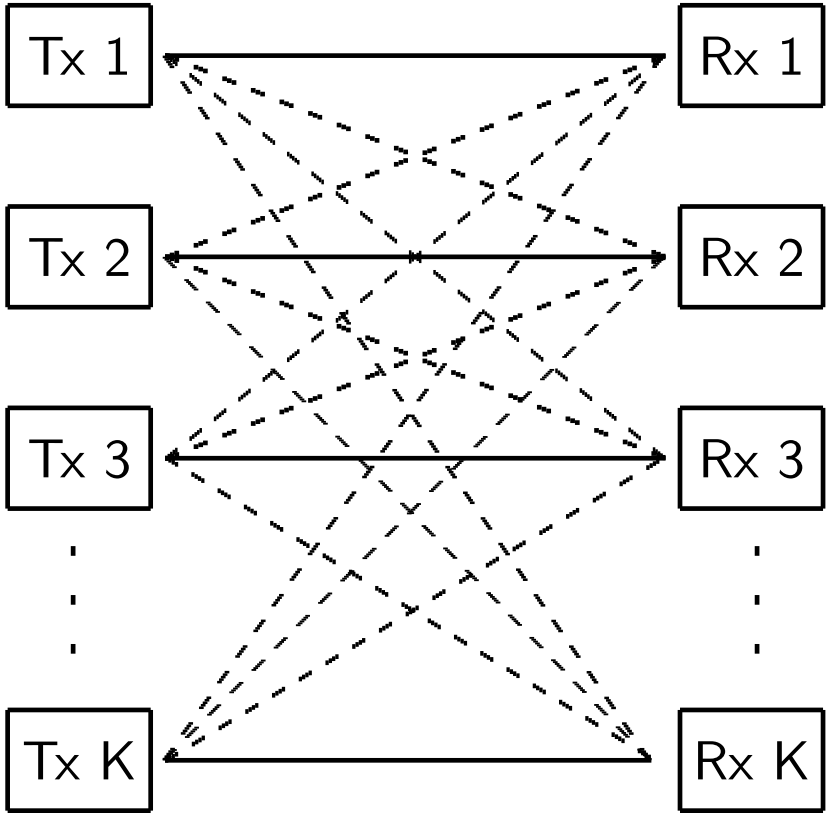

$$\mathbf{y}_k = \mathbf{H}_{kk}\mathbf{x}_k + \sum_{j=1, j\neq k}^{K} \mathbf{H}_{kj}\mathbf{x}_j + \mathbf{n}_k \quad \forall k = 1 \ldots K$$

K-user MIMO Interference Channel

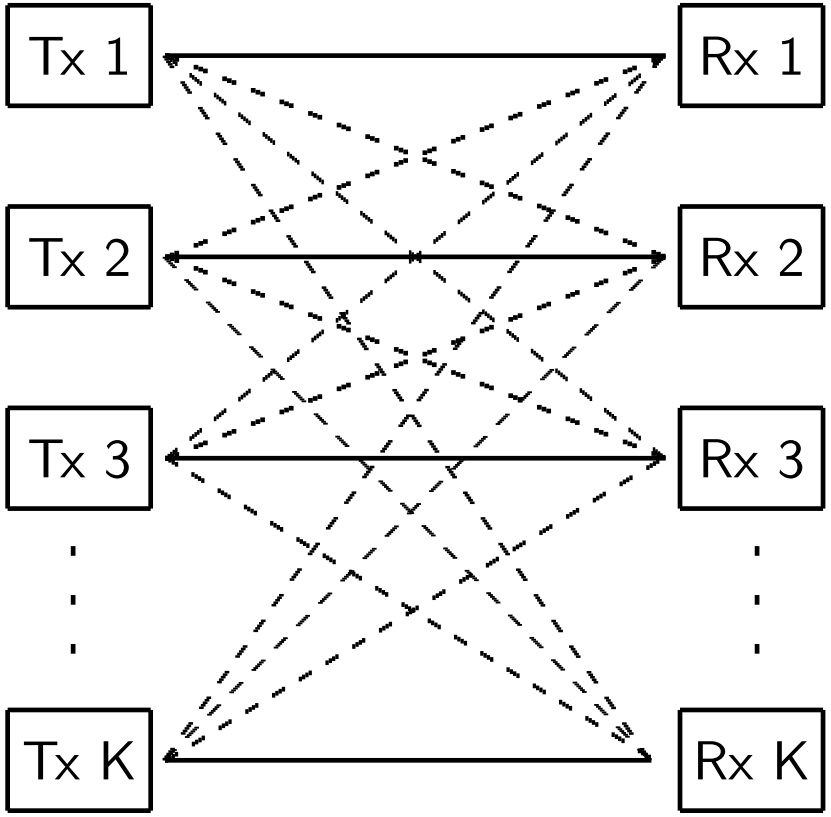

$$\mathbf{y}_k = \mathbf{H}_{kk}\mathbf{x}_k + \sum_{j=1, j\neq k}^{K} \mathbf{H}_{kj}\mathbf{x}_j + \mathbf{n}_k \quad \forall k = 1 \ldots K$$

Interference Alignment in Pictures

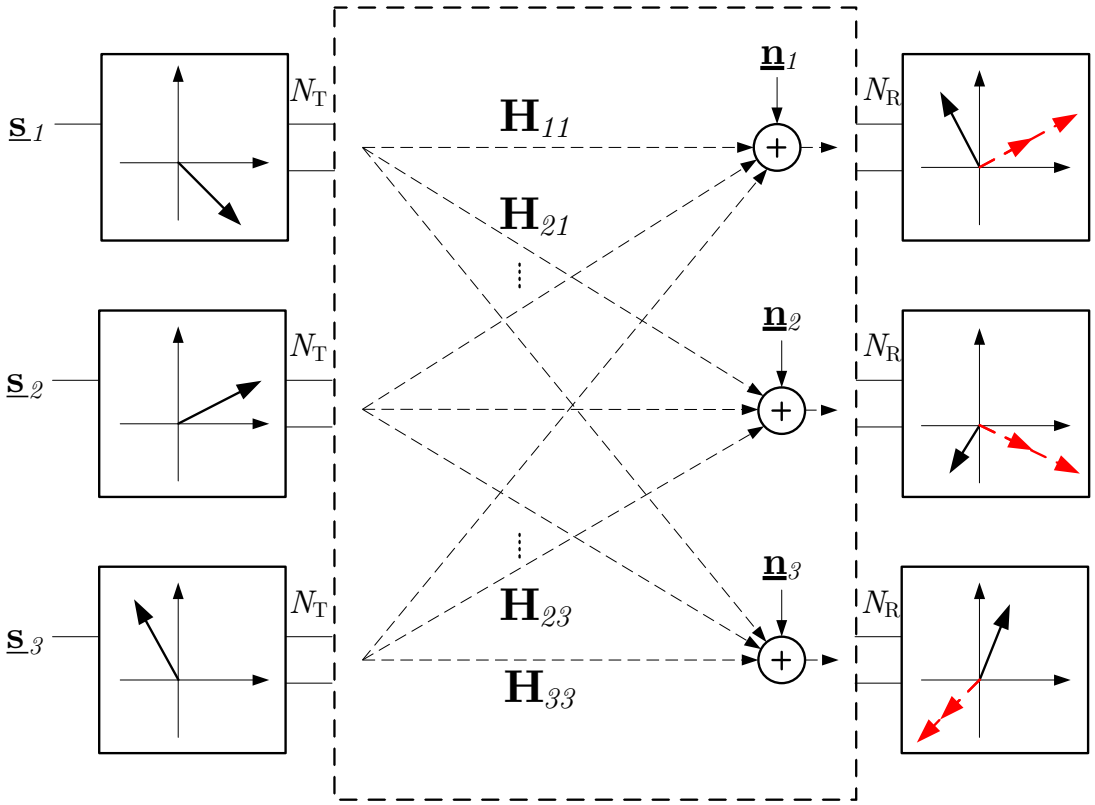

- Based on linear precoding: $\mathbf{x}_i = \mathbf{V}_i \mathbf{s}_i$ with $\mathbf{s}_i \in \mathbb{C}^d$
- Interference (in red) from multiple Tx *aligns* at the Rx
- Interference-free subspace used for communication

Mathematical formulation of IA[1]

- interference $\sum_{j \neq i} \mathbf{H}_{ij} \mathbf{V}_j \mathbf{s}_j$ does not occupy all receive dimensions
- IA solution equivalent to finding matrices $\mathbf{V}_i$ and $\mathbf{U}_i$

$$\text{s.t.} \quad \begin{cases} \mathbf{U}_i^{\mathrm{H}} \mathbf{H}_{ij} \mathbf{V}_j & = & 0, \ \forall j \neq i \\ \operatorname{rank}\left(\mathbf{U}_i^{\mathrm{H}} \mathbf{H}_{ii} \mathbf{V}_i\right) & = & d_i. \end{cases}$$

[1] K. Gomadam, V.R. Cadambe, S.A. Jafa, "A distributed numerical approach to interference alignment and applications to wireless interference networks," IEEE Trans. on Information Theory, June 2011.

Mathematical formulation of IA[1]

- interference $\sum_{j \neq i} \mathbf{H}_{ij} \mathbf{V}_j \mathbf{s}_j$ does not occupy all receive dimensions
- IA solution equivalent to finding matrices $\mathbf{V}_i$ and $\mathbf{U}_i$

$$\text{s.t.} \quad \begin{cases} \mathbf{U}_i^{\mathrm{H}} \mathbf{H}_{ij} \mathbf{V}_j & = & 0, \ \forall j \neq i \\ \operatorname{rank}\left(\mathbf{U}_i^{\mathrm{H}} \mathbf{H}_{ii} \mathbf{V}_i\right) & = & d_i. \end{cases}$$

[1] K. Gomadam, V.R. Cadambe, S.A. Jafa, "A distributed numerical approach to interference alignment and applications to wireless interference networks," IEEE Trans. on Information Theory, June 2011.

Why the hype ?

Some attractive properties

- Low-complexity processing, just linear filters
- Achieves the full channel degrees of freedom at high SNR

$$\mathrm{DoF} = \lim_{SNR \to +\infty} \frac{C_i(SNR)}{\log SNR} = d$$

BUT...

- Extensive CSI requirements: $\mathbf{H}_{ij}\ \forall j \neq i$
- What good is the DoF result at finite SNR ?

Why the hype ?

Some attractive properties

- Low-complexity processing, just linear filters
- Achieves the full channel degrees of freedom at high SNR

$$\mathrm{DoF} = \lim_{SNR \to +\infty} \frac{C_i(SNR)}{\log SNR} = d$$

BUT...

- Extensive CSI requirements: $\mathbf{H}_{ij}\ \forall j \neq i$
- What good is the DoF result at finite SNR ?

Why the hype ?

Some attractive properties

- Low-complexity processing, just linear filters
- Achieves the full channel degrees of freedom at high SNR

$$\mathrm{DoF} = \lim_{SNR \to +\infty} \frac{C_i(SNR)}{\log SNR} = d$$

BUT...

- Extensive CSI requirements: $\mathbf{H}_{ij}\ \forall j \neq i$
- What good is the DoF result at finite SNR ?

Why the hype ?

Some attractive properties

- Low-complexity processing, just linear filters
- Achieves the full channel degrees of freedom at high SNR

$$\mathrm{DoF} = \lim_{SNR \to +\infty} \frac{C_i(SNR)}{\log SNR} = d$$

BUT...

- Extensive CSI requirements: $\mathbf{H}_{ij}\ \forall j \neq i$
- What good is the DoF result at finite SNR ?

Why the hype ?

Some attractive properties

- Low-complexity processing, just linear filters
- Achieves the full channel degrees of freedom at high SNR

$$\mathrm{DoF} = \lim_{SNR \to +\infty} \frac{C_i(SNR)}{\log SNR} = d$$

BUT...

- Extensive CSI requirements: $\mathbf{H}_{ij}\ \forall j \neq i$
- What good is the DoF result at finite SNR ?

The Vienna MIMO Testbed Set-Up

- Replicate an urban outdoor-to-indoor and indoor-to-indoor scenario, with 3 Tx / 1 Rx

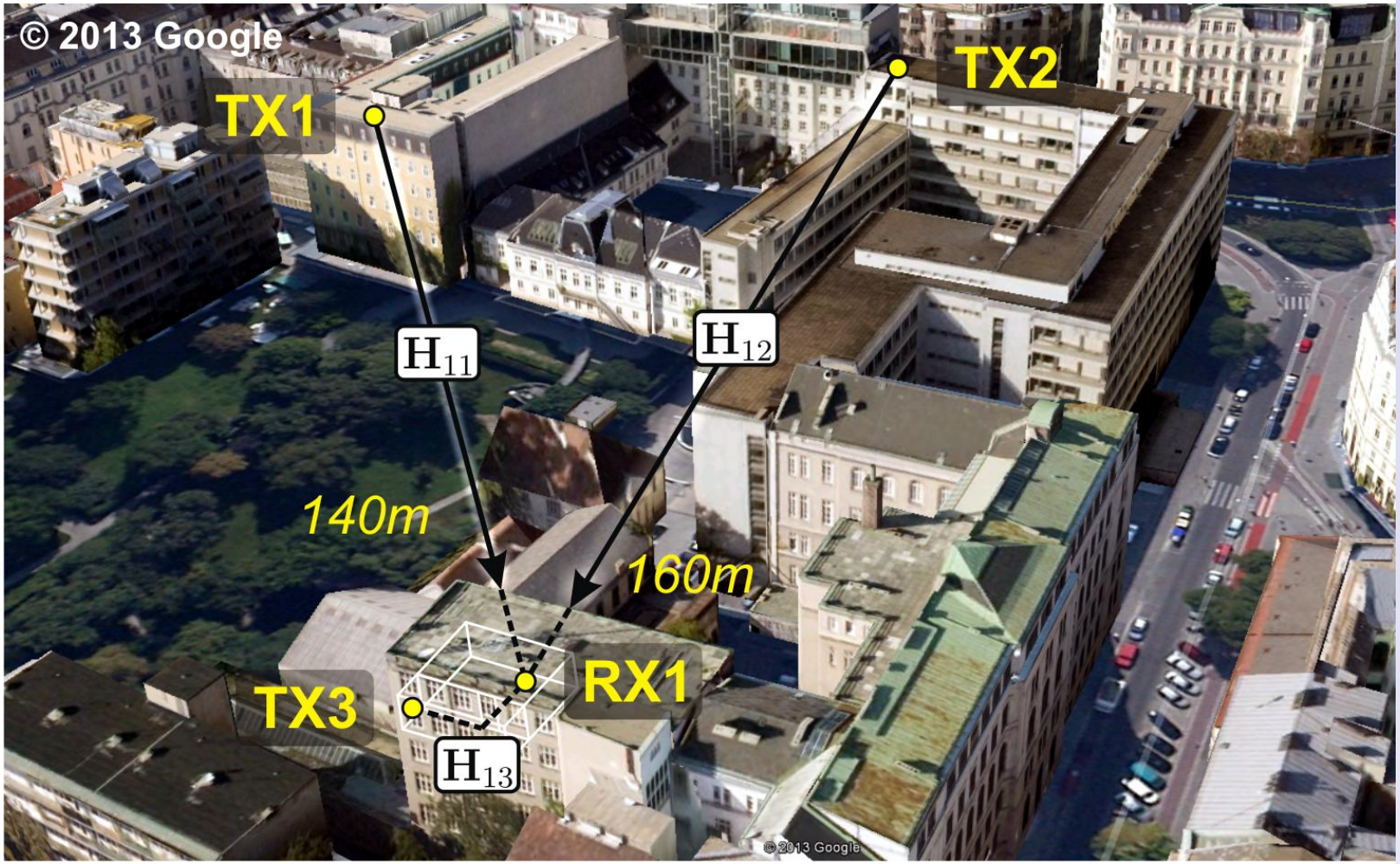

The Vienna MIMO Testbed Set-Up: Tx side

- 2 rooftop TX, Kathrein Scala Division XX-pol BTS antennas

- Indoor Tx, 2× Kathrein Scala Division X-pol directional ant.

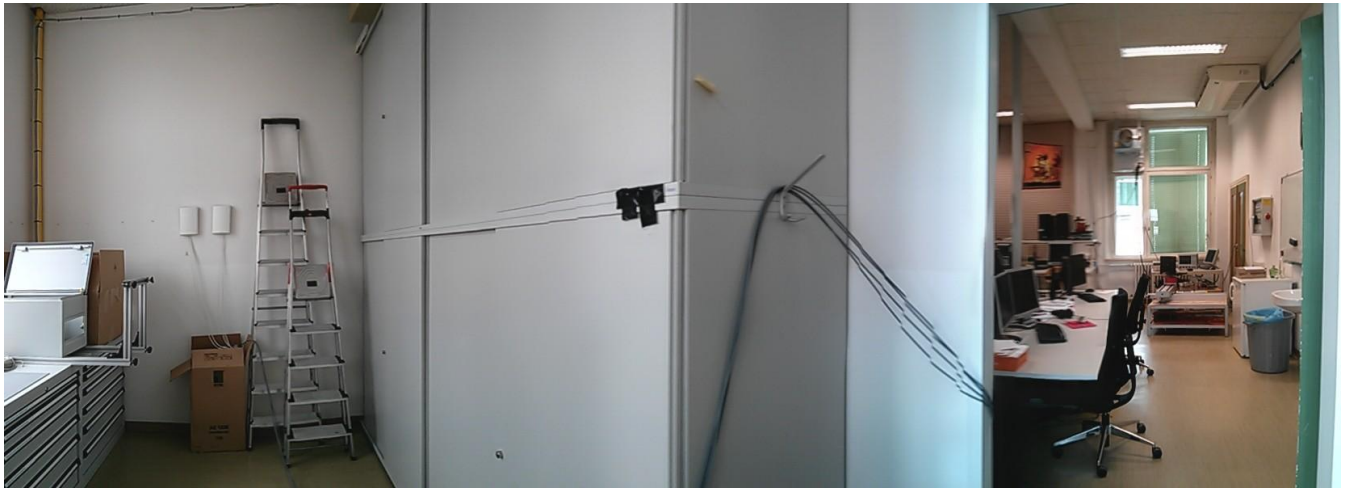

The Vienna MIMO Testbed Set-Up: Rx side

- Rx using 4 custom-built $\frac{\lambda}{2}$ dipoles in a laptop shell
- On a positioning table

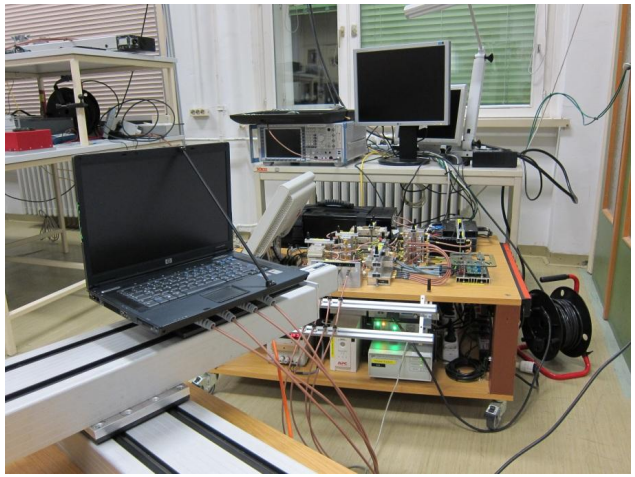

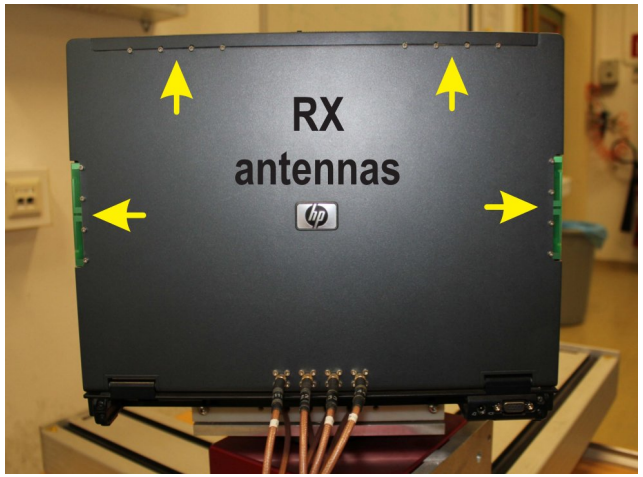

Testbed Characteristics

- 4 nodes (3 Tx + 1 Rx), 4 antennas per node
- Rubidium-synchronized clocks
- No duplexing, but high-speed feedback over dedicated fiber LAN
- Center frequency 2.503 GHz
- 200 MHz sampling rate
- OFDM with 15.02 kHz subcarrier spacing
- One instance of MATLAB at each node

IA-Specific Implementation Details

- Two additional "ghost" receivers to simulate the 3-user IC

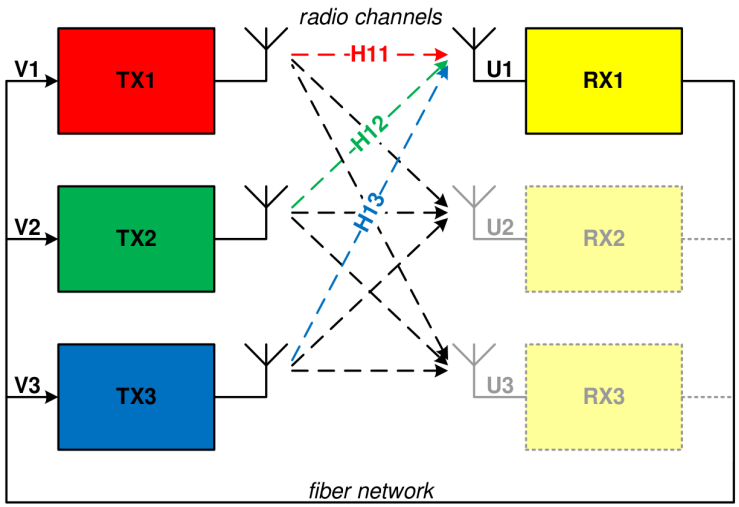

- System dimensions allow IA with $d = 2$ streams per user
- IA precoder computed in closed-form based on eigendecomposition
- Consider a single subcarrier to keep complexity low

Measurement Methodology

- Closed-loop system with periodic training sequences

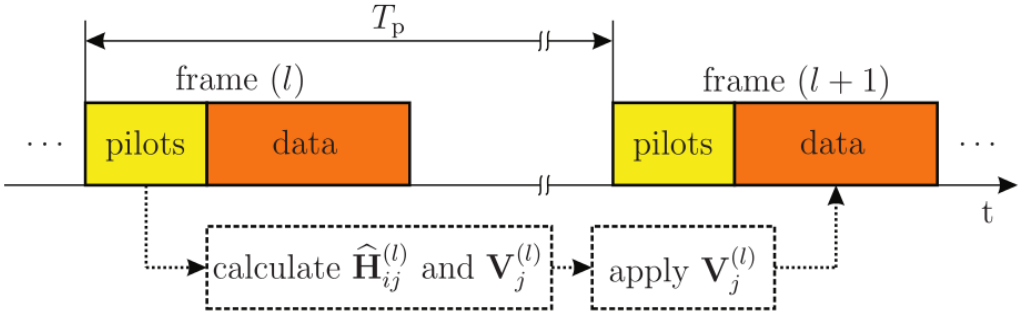

($T_p \approx$ 70ms)

Covariance-Based Performance Metrics

- Mutual information
  - independent of the channel code
  - upper bound for the achievable rate

- Consider the covariance at the receiver

$$\mathrm{E}\left\{\mathbf{y}_1\mathbf{y}_1^H\right\} = \underbrace{\mathbf{H}_{11}\mathbf{V}_1\mathbf{Q}_{\mathbf{x}_1}\mathbf{V}_1^H\mathbf{H}_{11}^H}_{\substack{\text{desired signal}\\ \mathbf{Q_S}}} + \underbrace{\sum_{j=2,3}\mathbf{H}_{1j}\mathbf{V}_j\mathbf{Q}_{\mathbf{x}_j}\mathbf{V}_j^H\mathbf{H}_{1j}^H}_{\substack{\text{interference}\\ \mathbf{Q_I}}} + \underbrace{\mathbf{Q}_{\mathbf{n}_1}}_{\substack{\text{noise}\\ \mathbf{Q_N}}}$$

- Assuming Gaussian signals:

$$\mathcal{I}(\mathbf{x}_1;\mathbf{y}_1) = \log\det\left(\mathbf{Q_I}+\mathbf{Q_N}+\mathbf{Q_S}\right) - \log\det\left(\mathbf{Q_I}+\mathbf{Q_N}\right)$$

Covariance-Based Performance Metrics

- Mutual information
  - independent of the channel code
  - upper bound for the achievable rate
- Consider the covariance at the receiver

$$\mathrm{E}\left\{\mathbf{y}_1\mathbf{y}_1^H\right\} = \underbrace{\mathbf{H}_{11}\mathbf{V}_1\mathbf{Q}_{\mathbf{x}_1}\mathbf{V}_1^H\mathbf{H}_{11}^H}_{\substack{\text{desired signal}\\ \mathbf{Q_S}}} + \underbrace{\sum_{j=2,3}\mathbf{H}_{1j}\mathbf{V}_j\mathbf{Q}_{\mathbf{x}_j}\mathbf{V}_j^H\mathbf{H}_{1j}^H}_{\substack{\text{interference}\\ \mathbf{Q_I}}} + \underbrace{\mathbf{Q}_{\mathbf{n}_1}}_{\substack{\text{noise}\\ \mathbf{Q_N}}}$$

- Assuming Gaussian signals:

$$\mathcal{I}(\mathbf{x}_1;\mathbf{y}_1) = \log\det\left(\mathbf{Q_I}+\mathbf{Q_N}+\mathbf{Q_S}\right) - \log\det\left(\mathbf{Q_I}+\mathbf{Q_N}\right)$$

Covariance-Based Performance Metrics

- Mutual information
  - independent of the channel code
  - upper bound for the achievable rate
- Consider the covariance at the receiver

$$\mathrm{E}\left\{\mathbf{y}_1\mathbf{y}_1^H\right\} = \underbrace{\mathbf{H}_{11}\mathbf{V}_1\mathbf{Q}_{\mathbf{x}_1}\mathbf{V}_1^H\mathbf{H}_{11}^H}_{\substack{\text{desired signal}\\ \mathbf{Q_S}}} + \underbrace{\sum_{j=2,3}\mathbf{H}_{1j}\mathbf{V}_j\mathbf{Q}_{\mathbf{x}_j}\mathbf{V}_j^H\mathbf{H}_{1j}^H}_{\substack{\text{interference}\\ \mathbf{Q_I}}} + \underbrace{\mathbf{Q}_{\mathbf{n}_1}}_{\substack{\text{noise}\\ \mathbf{Q_N}}}$$

- Assuming Gaussian signals:

$$\mathcal{I}(\mathbf{x}_1;\mathbf{y}_1) = \log\det\left(\mathbf{Q_I}+\mathbf{Q_N}+\mathbf{Q_S}\right) - \log\det\left(\mathbf{Q_I}+\mathbf{Q_N}\right)$$

Covariance-Based Performance Metrics

- Signal covariances *estimated over the air*

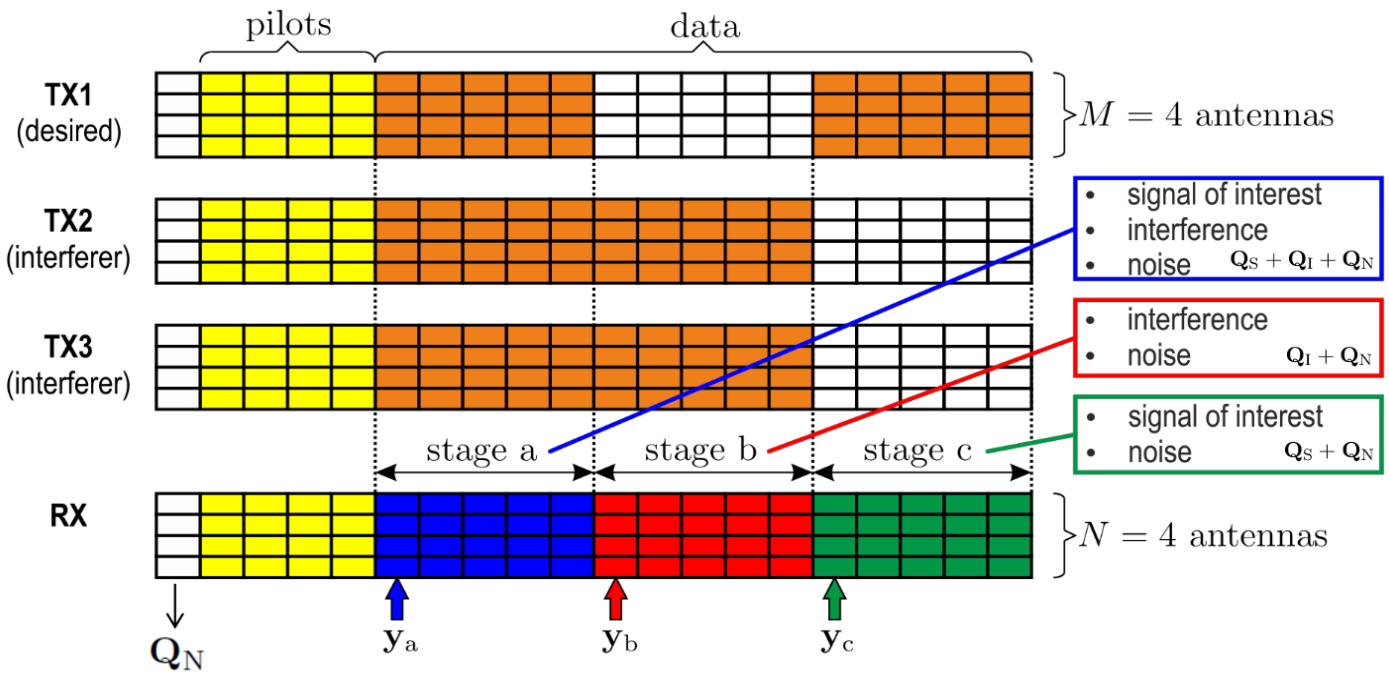

- With perfect CSIT: $\mathbf{Q_b} = \mathrm{E}\{\mathbf{y}_b\mathbf{y}_b^H\} = [\mathbf{U}_i \mathbf{U}_i^{\perp}]\,\mathrm{diag}(\lambda_1,\ldots,\lambda_4)\begin{bmatrix} \mathbf{U}_i^{\mathrm{H}} \\ \mathbf{U}_i^{\perp\,\mathrm{H}} \end{bmatrix}$

Covariance-Based Performance Metrics

- Signal covariances *estimated over the air*

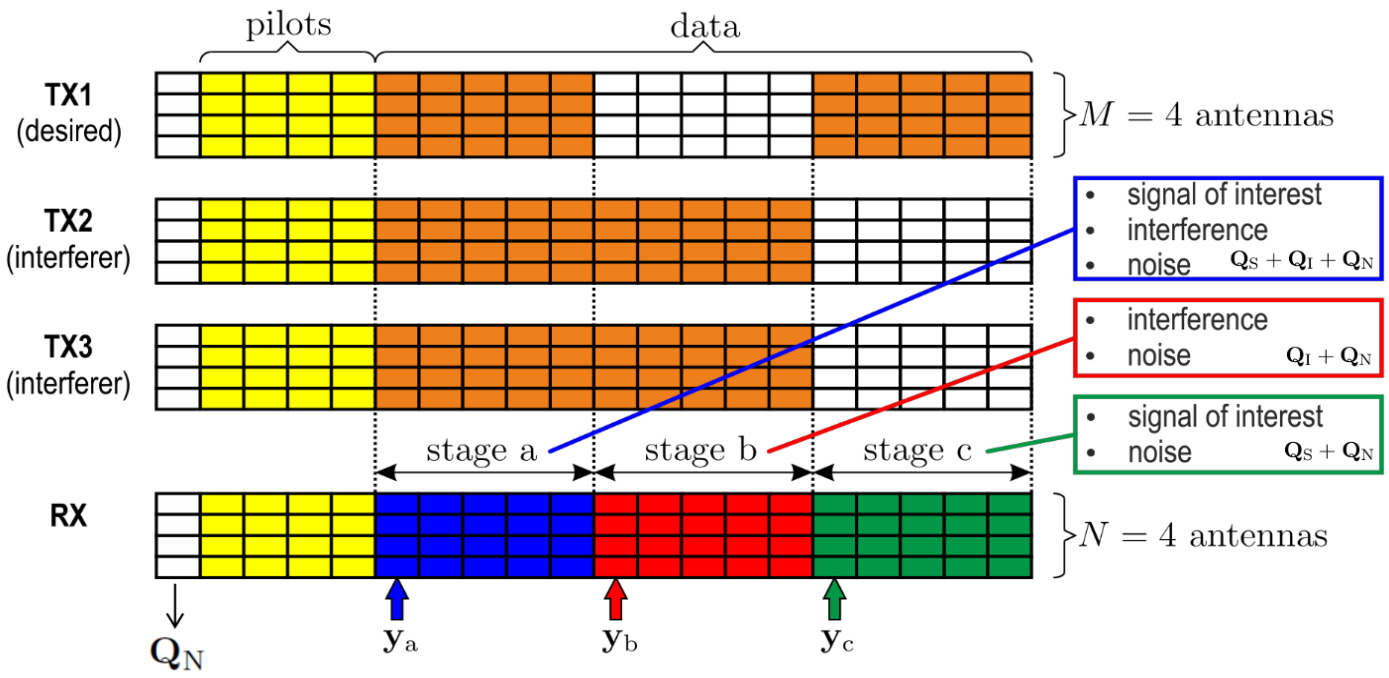

- With perfect CSIT: $\mathbf{Q_b} = \mathrm{E}\{\mathbf{y}_b\mathbf{y}_b^H\} = [\mathbf{U}_i\mathbf{U}_i^{\perp}]\,\mathrm{diag}(\lambda_1,\ldots,\lambda_4)\begin{bmatrix}\mathbf{U}_i^{\mathrm{H}} \\ \mathbf{U}_i^{\perp\,\mathrm{H}}\end{bmatrix}$

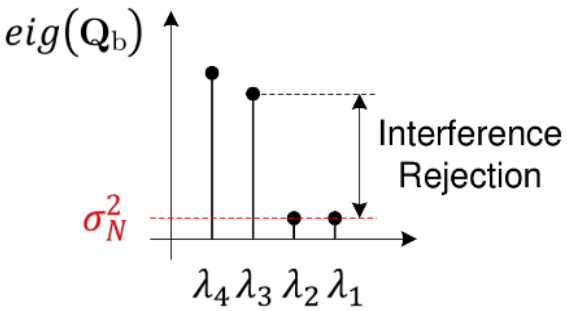

Spatial stationarity: 5 Rx positions

Aligning interference from Tx2 and Tx3

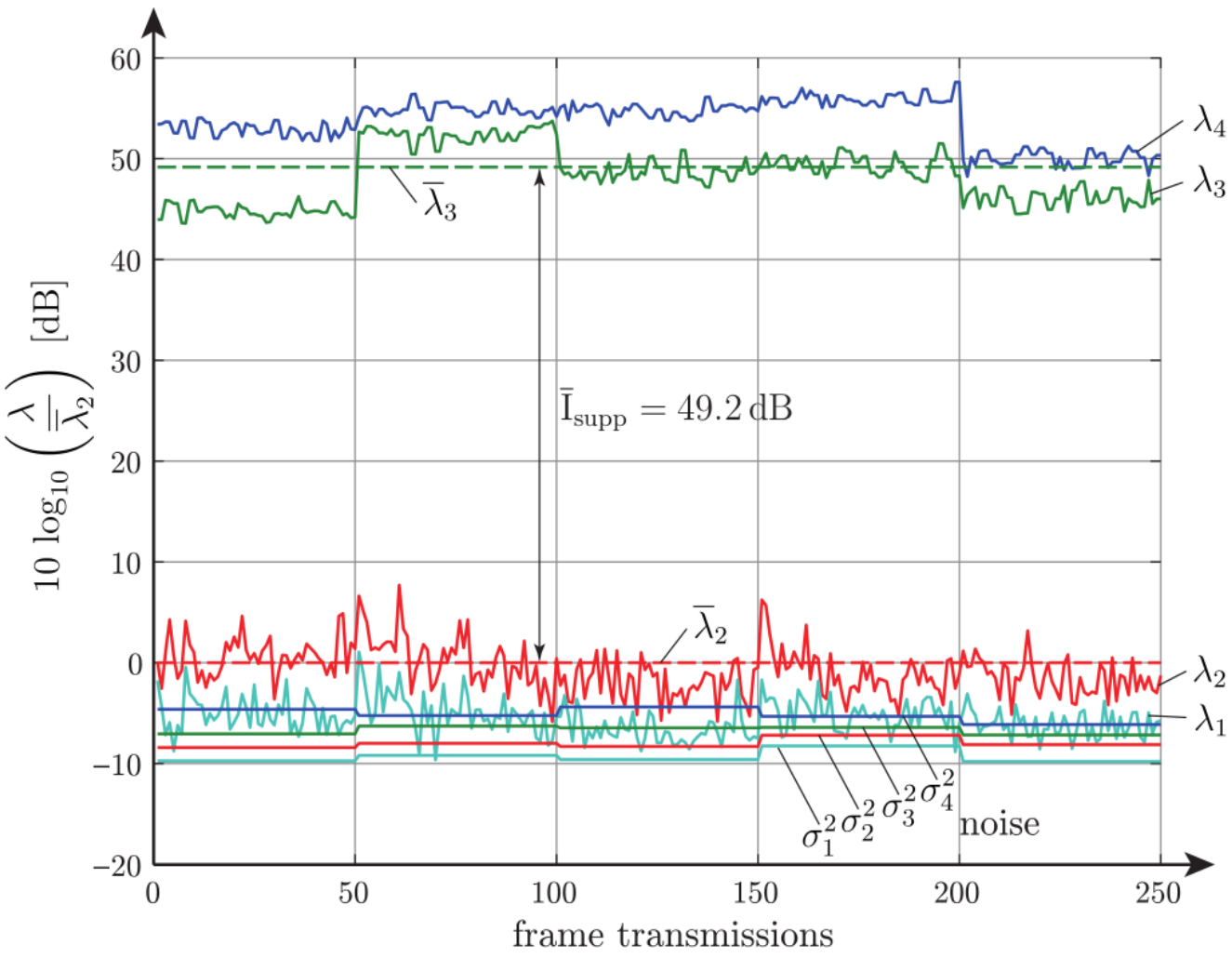

Spatial stationarity: 5 Rx positions

Corresponding RSS for 5 positions

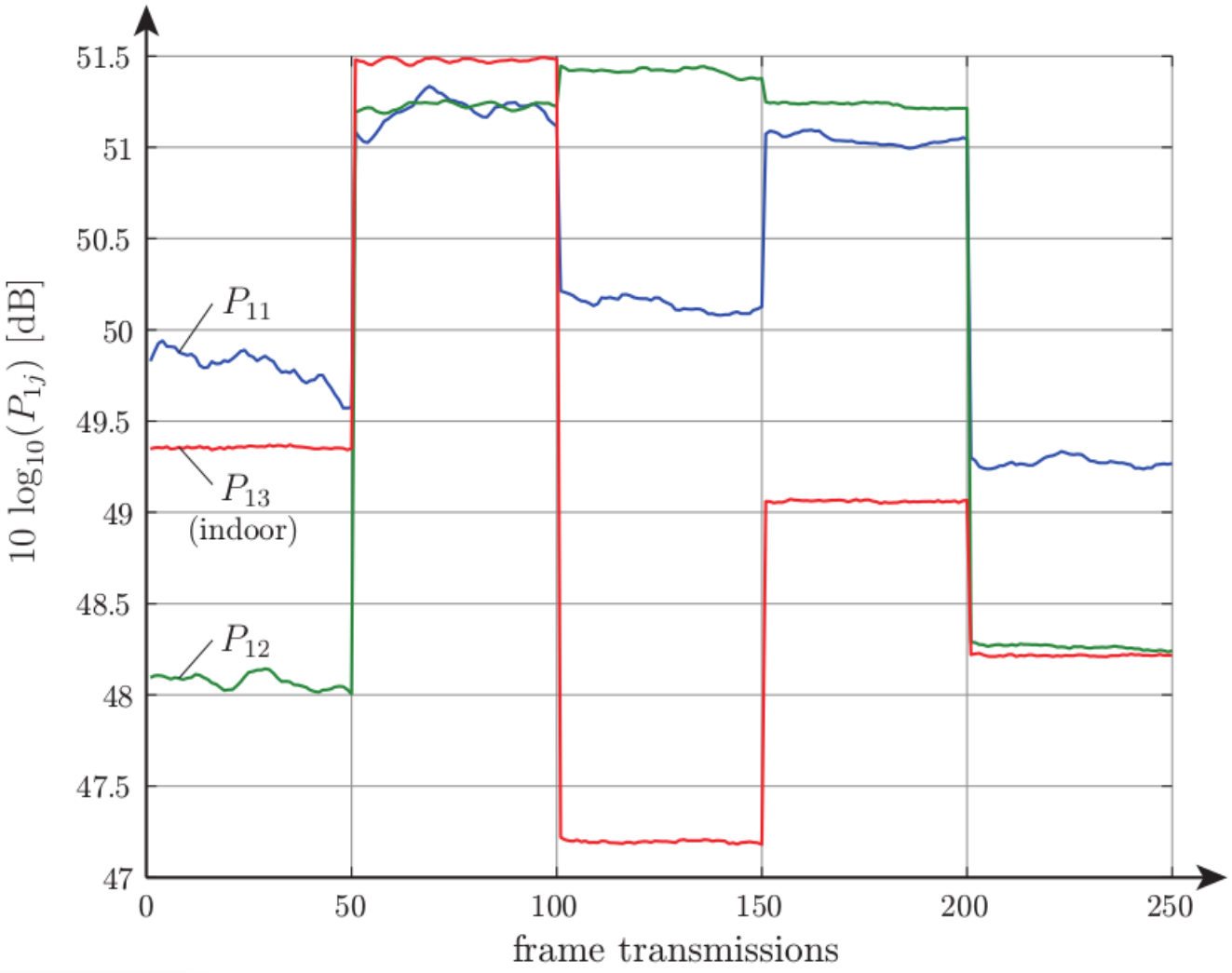

Spatial stationarity: 5 Rx positions

Aligning interference from Tx1 and Tx2

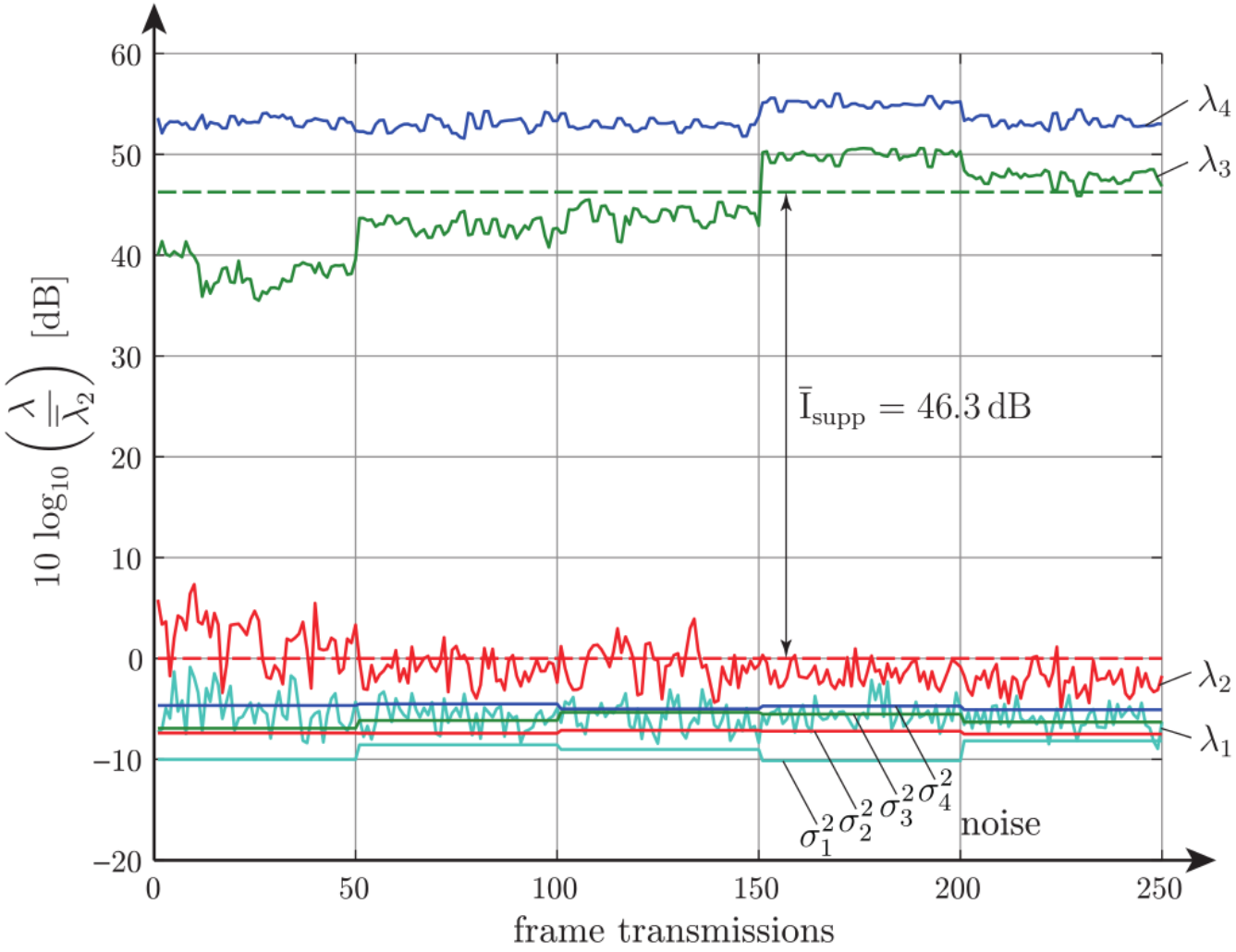

Interference suppression

$\mathrm{E}\left\{\frac{\lambda_3}{\lambda_2}\right\}$ for signal of interest from Tx 1, 2 and 3

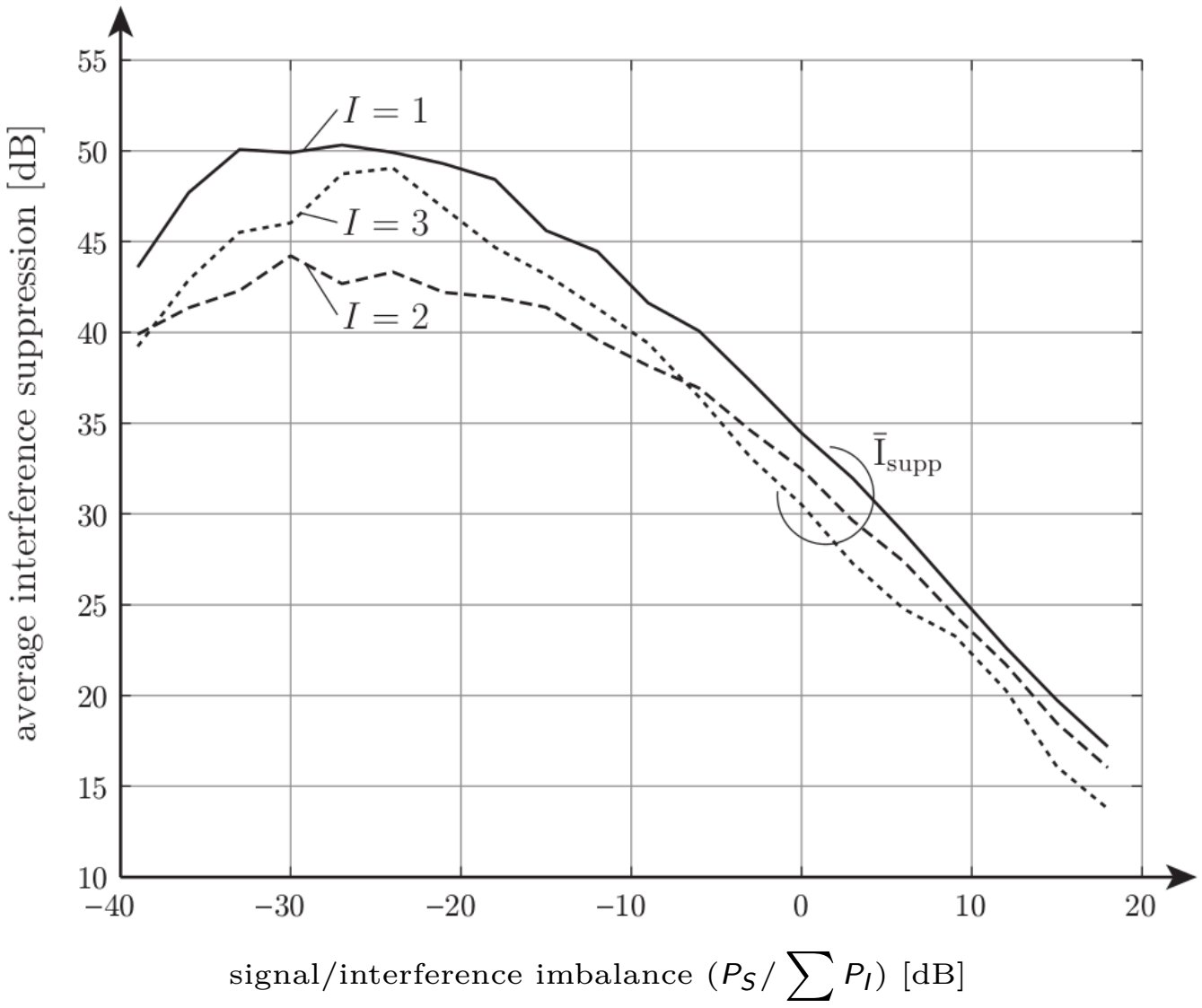

Noise & Interference vs. Tx Power

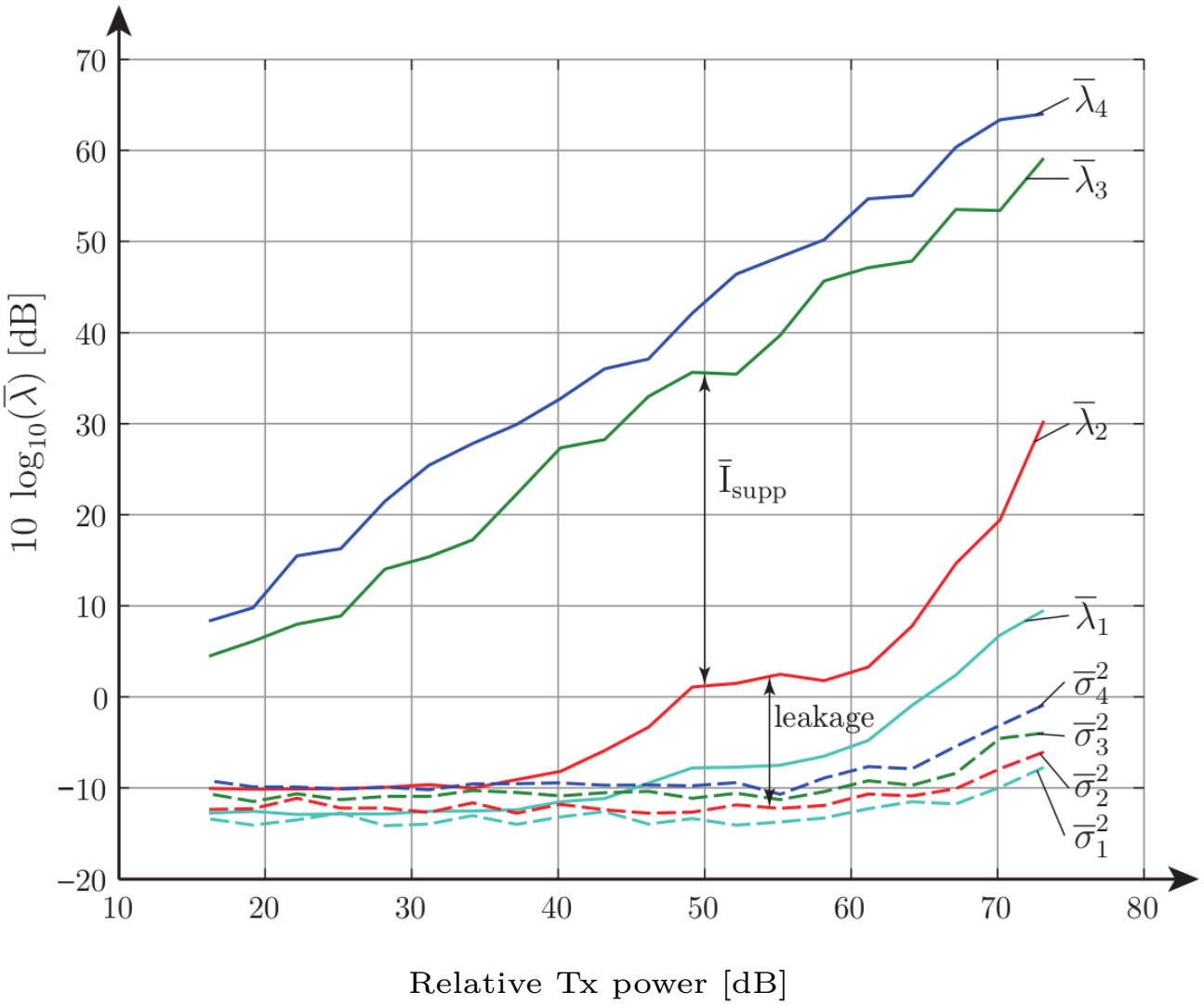

Transmitter noise becomes significant at high Tx power!

Noise & Interference vs. Tx Power

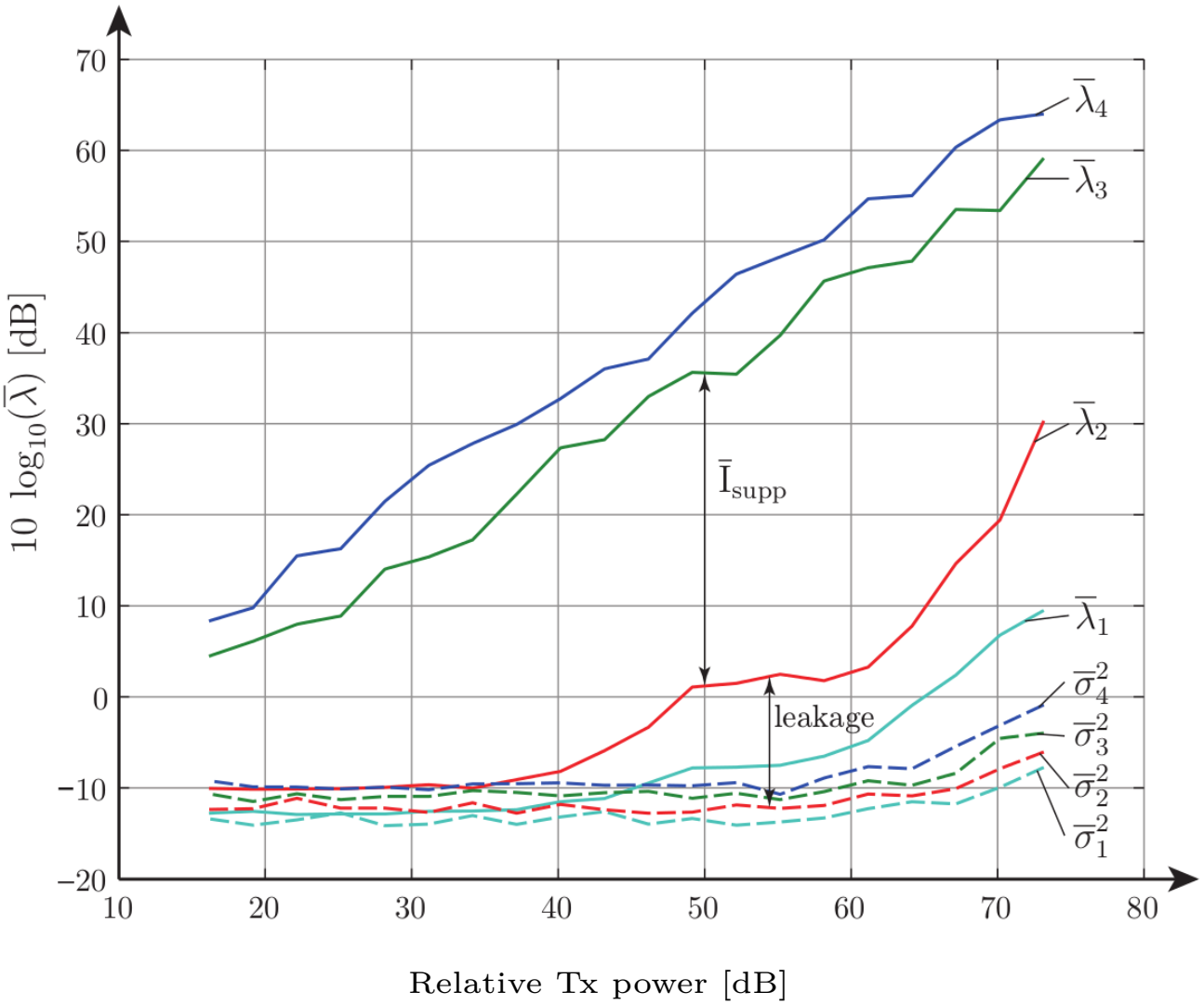

Transmitter noise becomes significant at high Tx power!

Conclusion

Experimental evidence (in our testbed) for

- Interference leakage (due to delayed CSI ? synchronization ? channel estimation noise ?)

$$\bar{\mathrm{I}}_{\mathrm{supp}} \approx 45 - 50 \text{ dB at best}$$

- Transmitter noise (below -20 dB SIR)

Thank you for your attention

Questions ?