Teaching Power Management Techniques for Hybrid Electric Cars by a Interactive Simulation

G. Stojcic, M.A. Samonig, S. Hecht, P. Nussbaumer, T.M. Wolbank
Department of Energy Systems and Electrical Drives Vienna University of Technology
Gußhausstrasse 27-29
Vienna, Austria
E-Mail: goran.stojcic@tuwien.ac.at
URL: http://www.ieam.tuwien.ac.at/forschung/sustener/

Keywords

«Teaching», «Hybrid Electric Vehicle (HEV)», «Educational Tool»

Abstract

Usage of sustainable energy is a key factor for solving future climate issues. The purpose of the project SustEner is to modernize Sustainable Electrical Energy vocational training by enhancing existing or establishing new training methods in enterprises and education. This paper presents the SustEner module power management techniques in hybrid electrical cars.

Introduction

Increasing environmental pollution and the shortage of resources are factors that will significantly influence future mobility. These determining factors yield new demands on future vehicle power train technologies. The various new drive concepts provide distinct advantages and disadvantages and are accordingly suitable for different applications. Hybrid electric cars form a bridge technology meeting the effort of both, fast and comfortable individual mobility and saving resources [1]. To satisfy increasing research in this area students and engineers must be well trained for the topic. Improvement in teaching using support of modern information and communication technology can raise the interest and comprehension [2], [3]. Furthermore, instructors can explain the complex technical problems in a way which is easier to understand and imagine; [4]-[6] and [7]. In this paper a simulation tool is presented which covers the mentioned issues.

Teaching Objectives

This learning module is tailored to a specific group of active engineers and upcoming ones. Within the target group are engineers involved in the design of electric drives for vehicles as well as students working in the field of e-mobility. The tool is designed as an interactive web browser based application. The user is able to preset several boundary conditions as well as vehicle parameters and test their influence on the whole system by running a simulation. The main focus is given on the energy consumed in the hybrid electric car within a preset driving cycle. The main opportunities that can be manipulated by the student within this interactive tool are given as follows:

- Configure a hybrid car with combustion machine, electrical machine, battery storage
- Chose from different driving cycles with various percentage of highway and inner city as well as up and downhill passages
- Activate and deactivate different auxiliary systems like lights, air conditioning, entertainment, ...
- Compare the overall efficiency of the chosen level of hybridization and power distribution of the car, starting from a full electric car up to a conventional car powered by combustion machine only
- Compare the overall energy needed to cover the driving cycle based on the different boundary conditions

With these possibilities the student should be able to understand the interaction of all components present in a hybrid electric vehicle. The focus of the learning module is laid on the presentation of the energy flow between the different components rather than the individual function of each component. The main goals of the teaching module can be defined in two points:

- Energy consumption investigation: the peak efficiency is often communicated as the dominant parameter. But the achieved range of operation of a vehicle is mostly defined by the energy consumed at partial load operating states where the auxiliary power consumption of the vehicle may be even higher than that of the traction power.
- Enhanced knowledge of the influence of the level of hybridization and auxiliary systems on vehicle performance and energy efficiency.

Simulation of Hybrid Electric Car Power Management

In the hybrid electric cars the electric machine together with the internal combustion machine (ICM) generate the power needed for driving, Fig 1. The main purpose of the electrical machine in parallel configuration is to keep the ICM working near its optimum combustion efficiency. In a full electric car currently only the energy stored in the battery is available. In any configuration the goal is to use the energy available with the highest efficiency possible.

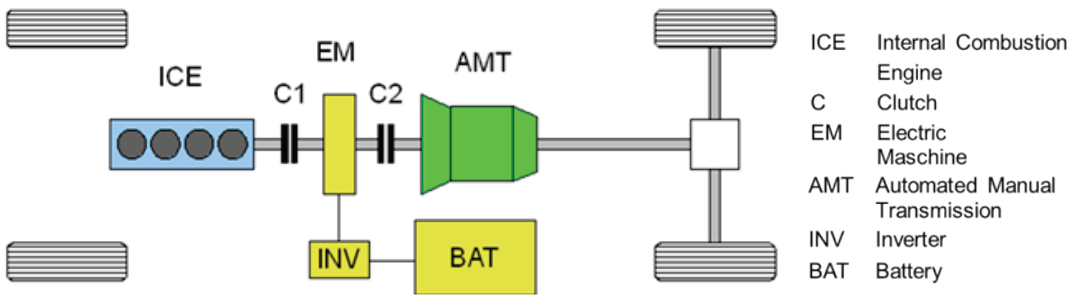

Fig 1: Example for a hybrid drive train

The electric machine has a peak efficiency of more than 90% Compared to more than 40% with modern internal combustion engines. However, these values may drop dramatically when operated only at partial load. In public discussion usually only the peak efficiency numbers are communicated sometimes leading to expectations that cannot be met in practical operation. When driving at a speed of around 20km/h what corresponds to average speed of inner-city traffic, the necessary traction power is only a fraction of the installed power. As a result the efficiency of the drive train dramatically decreases and the power consumed by auxiliary systems of the vehicle like heating, air conditioning, power steering, audio or lighting may even be higher than that consumed for actually driving. Depending on the driving cycle the optimum level of hybridization as well as load sharing strategy and electrical energy storage management for highest overall efficiency will thus be completely different. The goal of the module presented here is to show and compare the influence of the installed power of the combustion machine and the electric machine as well as the electrical storage capacity on the overall performance (acceleration rate, top speed, fuel consumption, etc.) of a hybrid car. The focus lies on the overall energy needed to drive a distance on specific standard driving cycles.

Simulation of Power Management

The simulation approach is based on the parallel hybrid system. The electrical drive train branch, so to speak is "in parallel" and can be switched on or off. The internal combustion engine and the electric motor are ideally uncoupled - the vehicle can then be operated purely electric, conventional or mixed. Adding up the power of all components is possible. The output power of electric and internal combustion engine can be superposed mechanically by means of speed addition (with a planetary gear), torque addition (direct coupling, with spur gear or chain) or traction addition (electric motor and combustion engine work on different drive axles).

The Advantage of this configuration is that only one electric machine is required, which operates either as a drive motor or as a generator. The drive components can be designed more efficiently. Basically the energy flow of the electric system can be considered to transfer between battery storage, inverter and the electrical motor/generator. So, the complex system is much easier to understand for users not widely familiar with hybrid systems. The internal combustion engine can be scaled to the maximum speed at high way operation and the electrical components on the city operation (large internal combustion engine, small electric drive). Furthermore, the mechanical connection of the internal combustion engine is direct to the wheel. With this configuration also conventional propulsion system can be realized without the need of a special simulation program. The power flow between the components is given in Fig 2 as a block diagram. Based on this block diagram a simulation tool was programmed under Matlab/Simulink.

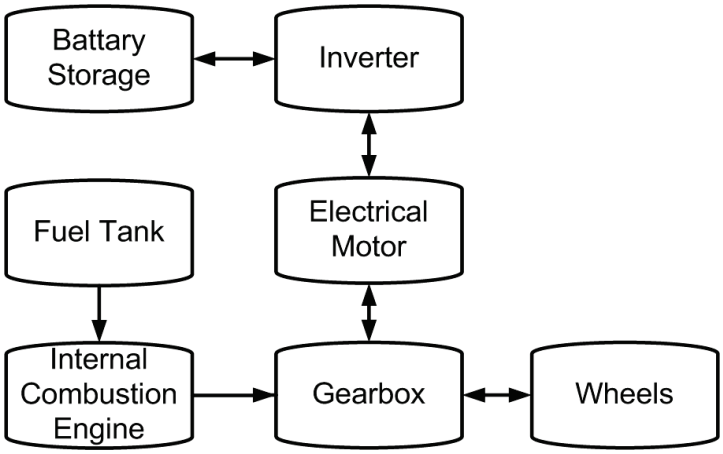

Fig 2: Power flow diagram of a parallel hybrid system

Interactive Simulation Tool

The e-learning component is provided in the form of a web application. It is implemented with the programming language 'Processing.js'. This is a javascript port of the programming language 'Processing', which was designed to present images, visualizations, and especially interactive content. The language itself is based on Java and ports the code to JavaScript. This allows the application to be rendered in an HTML canvas element. Thus, the application in all new versions of Firefox, Opera, IE9, Safari and Chrome can be performed without a plug-in. In addition, using 'Processing', a Java applet is generated for older browsers that have already installed a Java runtime.
The simulation model of the vehicle was first realized and tested using Matlab/Simulink, as this software platform offers powerful analysis and testing tools. The equations and control loops of the model are then reprogrammed with the programming language 'Processing' to facilitate interactive operation for learning purpose.
The target application will allow the user to configure the key system parameters and check their interconnection by simulating a driving cycle. Therefore, the influence of these parameters on the energy balance and the overall performance, are taught depending on the boundary conditions. The user will thus get a feeling of the interconnection of the different system parameters and their impact on the energy consumption by comparing multiple configurations. It is specifically well demonstrated that the energy efficiency and CO2 emission of different types of vehicle heavily depends on the route type (electric motors are better in the city, on the highway combustion engines, hybrid systems are in the middle).

Component selection

In a first step the user has to arrange the drive train components, i.e. the ICE and electrical machine size and power as well as the size of energy storages (fuel tank, battery). The base weight of the vehicle is fixed though and the variable weight is derived from the configuration of the drive train using typical values of actual cars.

Educational objectives:

These decisions have major impact on the simulation outcome because the selected components affect key parameters as the vehicle's weight and possible cruising range. Thus, the user gets a sense of what good scaling of these components means with regard to the intended field of application, represented by the driving cycle (see next paragraph). For example could a combination of large internal combustion engine and small electric drive be used to enable maximum speed in highway operation and low speed high acceleration operation for stop and go city cruising. The possible scaling combinations here are countless.

Driving cycle specification

During the next step the user has to specify a driving cycle that is handled by three diagrams. These diagrams (Fig 3) define the vehicle's acceleration, speed and drive cycle altitude profiles over the time. To guarantee easy accessibility the application allows the selection of predefined driving cycles to enable a quick start for first time users. These preset profiles for speed and altitude can be changed by simply shifting individual dots or inserting new ones in the traces of Fig 3. The acceleration is then computed from the derivative of the velocity. If needed, even an individual cycle can be created. In addition the following adjustments can be also made to the simulation:

- Depending on the environmental situation auxiliary equipment may be used and turned on or off during simulation.
- The load sharing strategy can be adjusted. At partial load operation the traction power flow can be chosen to originate from ICE, electric machine, or both (hybrid operation). The user can chose from different predefined load sharing strategies, change their parameters or even may design an own load sharing algorithm.
- The speed of the simulation can also be adjusted (slow, real time, fast forward).

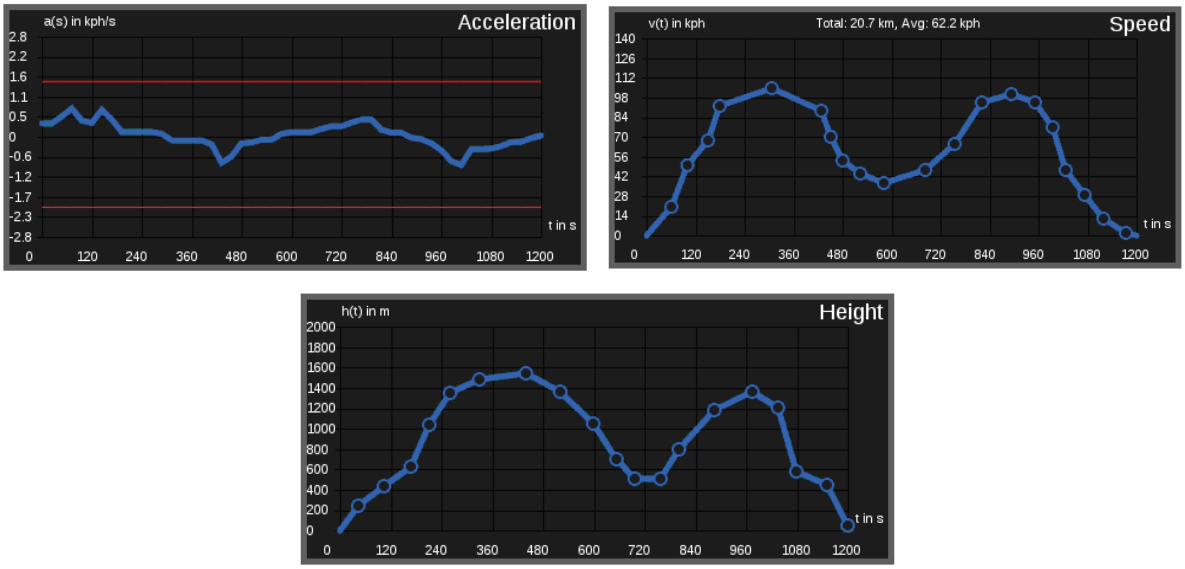

Fig 3: Driving cycles are defined by the vehicle's acceleration, speed and altitude profiles over the course of time.

Educational objectives:

Depending on the field of application and the environmental situation the vehicle is confronted with different load requirements. With respect to this, the user has to give thought to the question: Is the scaling of the used components suitable to cope with given demands? Starting from this central question different scenarios can be analyzed to distinguish between more and less capable configurations. In this context worse combinations could be characterized by a dramatic decrease of overall drive train efficiency, stressing the importance of a holistic view on the whole drive system in terms of overall efficiency as opposed to peak efficiency.

Simulation output

During the simulation, the movement along the driving cycle is performed. A typical output generated by the application is depicted in Fig 4, which shows at its top the driving cycle's traces of actual and target speed over time/distance. The altitude is shown in the same way. From the traces for the instantaneous speed and altitude values the distance already driven and the remaining distance can be derived.

Educational objectives:

Comparison of actual and target speed/altitude values give important information on the viability of a certain load sharing strategy when confronted with a specific driving cycle, i.e. the deviation of target and actual values is characteristic for the capability of a concept to handle a given load profile. In this sense more deviation from the target trace means worse fulfillment of the conductors demands. It is clear that this deviation is only tolerable in a certain range without getting too dominant and reducing "fun factor" of driving and more importantly even passenger security. Taking these aspects into consideration the student can use the program to find and shift the limits for given concepts and even push them so far in order to experience their breakdown.

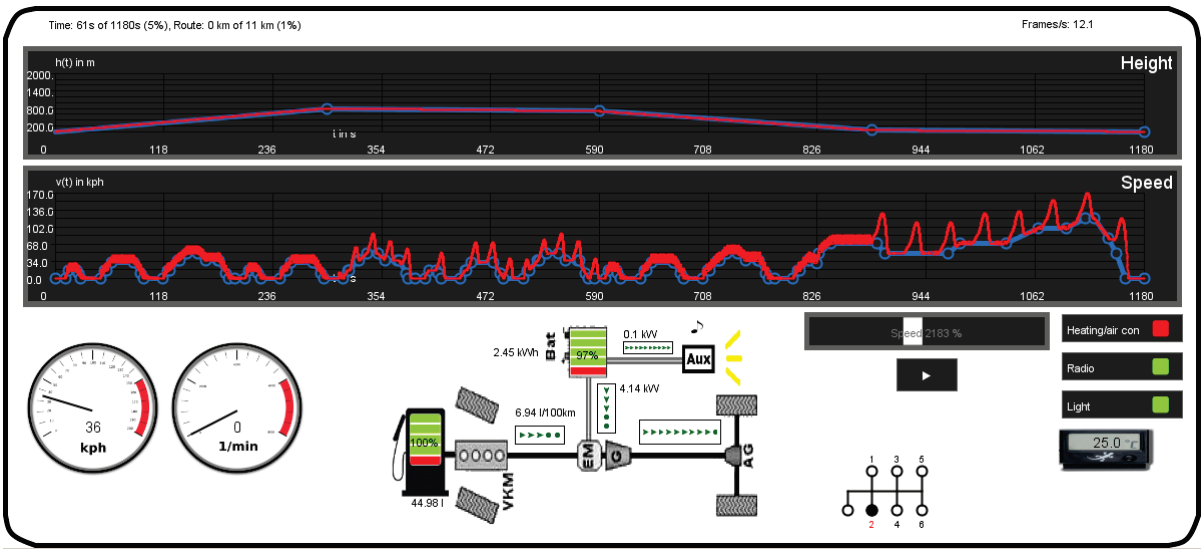

Fig 4: Typical user interface output during simulation of predefined driving cycle (blue traces). Red traces show actual speed and altitude. In addition the hybrid drive train is shown at the bottom mid, indicating fuel and charge levels and energy flow (green arrows). The auxiliary system indicators (green/red lights at the right side, yellow light beams /music note around the AUX box in the drive train illustration) show turned on radio and light. At the bottom right side gearshift position and ambient temperature can be seen. The cockpit elements on the bottom left side display instantaneous values of driving and engines rotational speed.

Presentation of data such as current values of vehicle speed or engines rotational speed, etc. is realized with well known cockpit elements (e.g. speedometer) to resemble the view a user is used to interpret when driving a real vehicle.

Educational objectives:

The display of instantaneous values by cockpit elements is primarily aimed at giving the user a direct feedback and a more intuitive insight into various state variables, as the indicators imitate the view of a real car dashboard. In case of the speed indicator the element depicted makes it easier for the user to optically identify the current speed value and its changes as it offers a higher resolution than the time trace view. Same considerations led to the insertion of a tachometer to give the student a straight view on the ICE rotational speed. From this indicator information on the current status of the ICE can be drawn, i.e. is it operating at an efficient range or is it reaching its limits and thus risking internal damage.

An additional display shows the temperature representing the climate data. For auxiliary systems such as heating/air conditioning and headlight as well as radio cockpit elements are indicating their actual status, i.e. whether they are turned on or off.

Educational objectives:

Ambient data is of high importance because of its direct impact on the driver's use of auxiliary energy. This becomes clearer if taking the natural limits in consideration within the human body is able to work efficiently. The most prominent are temperature and lighting conditions. In other words when the ambient light gets too low the vehicle has to cope with an additional consumption of electrical energy to generate light. On the one hand this light serves personal comfort and security, on the other hand it is a legal obligation and therefore crucial for the car's official approval for road service. If the temperature deviates from the level comfortable for the driver, the vehicle interior needs heating or cooling, respectively.

The limits when this two switch points (heating and cooling) are reached depend on individual comfort level. For the simulation they are set to predefined fixed values. With the presented application the user can analyze the influence of changing ambient conditions on the system.

The hybrid drive train is literally the center of the simulation and its output in Fig 4 and illustrates the used energy sources and their usage. The energy flow schematic is of special interest as it contains information on energy distribution and load sharing within the different components of the drive train.

Educational objectives:

For the electric motor the user can track the battery's charge level and load status, whereas fuel level and consumption are shown for the ICE. The vehicle drive train configuration (full ICE, fully electrical or hybrid machine) is directly visible from these indicators as the power distribution schematic for the corresponding component is automatically turned on/off according to its usage. In full ICE mode for example only the power distribution of the internal combustion engine will be shown. Fully electrical operation only exhibits electrical energy flow, whereas hybrid mode depicts both, electrical as well as combustion engine power distribution. From the mentioned indicators the user obtains important information on the operational demands of all components and can therefore get clear statements on total energy efficiency of the whole system, not solely considering the aforementioned peak values, but also taking the loss of efficiency for partial load conditions into account. In this way considerations on the overall energy efficiency make a big contribution to forming a comprehensive picture of the analyzed drive train component mix. By working with the application the user will get a feeling for the effect of different vehicle parameters on the total energy consumption and efficiency of different hybridization levels.

Another factor getting increasingly important nowadays is derivable from the internal energy distribution. This is the amount of greenhouse gases produced by the vehicle during its driving cycle.

Educational objectives:

The CO2 output curve Fig 5 is directly linked to and can therefore be derived from the internal energy distribution. With the presented application students can thus analyze the impact of various supply combinations and driving cycles on the vehicle's ecological footprint. It is specifically well demonstrated that energy efficiency and CO2 emission of different types of vehicles heavily depend on the route type. Electric motors are better suited for short range city driving. Combustion engines benefit from long range highway cruising and hybrid systems are positioned in the middle.

Once the simulation is completed, a summary is given together with a comparison of the overall energy consumption (Fig 5) and total energy efficiency with the one of a predefined vehicle with standard load sharing strategy.

Educational objectives:

From the summary at the end of simulation students may recap all aforementioned points of interest and more importantly are able to compare their custom defined vehicle against the results of a predefined standard configuration. Essentially this serves the purpose of benchmarking the model

and identifying potentially interesting modifications of vehicle parameters and boundary conditions for subsequent simulation runs.

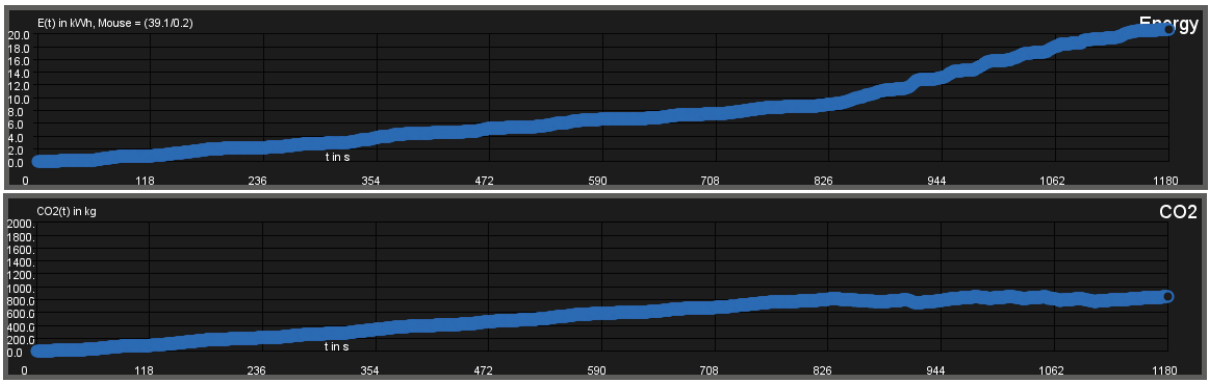

Fig 5: Representation of CO2 generation and overall energy consumption of the vehicle during the preset drive cycle.

Conclusion

In this paper a web application based simulation and learning module for teaching power management and load sharing of hybrid vehicle systems was presented. Basically, the module focuses on the total energy consumption and the energy/power flow between the different components rather than the individual functions of each component. Main teaching goals were defined on that the user should improve his knowledge in demands of hybrid vehicle systems. The simulation is based on a parallel hybrid drive system and it is based on the testing of various drive/strategy configurations on typical driving cycles with respect to overall power consumption. The chosen representation as web based application that runs in all commonly used browsers without additional plugin gives the opportunity of a wide dissemination. Different execution steps as vehicle and drive cycle configuration enable the user to makes improvements in the decision–making process.

Disclaimer

This project has been funded with support from the European Commission. This publication reflects the views only of the author, and the Commission cannot be held responsible for any use which may be made of the information contained therein.

Lifelong Learning Programme

References

[1] Chan, C.C. "The state of the art of electric and hybrid vehicles,"Proceedings of the IEEE , vol.90, no.2, pp.247-275, Feb 2002.

[2] P. Bauer, V. Fedak, V. Hajek, and I. Lampropoulos, “Survey of distance laboratories in oower electronics,” IEEE 39th Annual Power Electronics Specialists Conference, Rhodos, 2008, ISBN 978-1-4244-1668-4.

[3] E-learning Distance Interactive Practical Education – EDIPE, Pilot Project of the EU Leonardo da Vinci Vocational Training Programme. Project No CZ/06/B/F/PP-168022, duration 10/2006 - 09/2008, at http://www.powerweblab.com

[4] F. Coito, L. Gomes, and A. Costa, “Simulation, Emulation and Remote Experiments,” Proceedings of the *Workshop on using VR in Education*, Lisboa, March 2007, pp. 99-110, ISBN 978-989-20-0715-1.

[5] Proceedings of *International Conference on Remote Engineering and Virtual Instrumentation* (REV’07), Porto, Portugal, June 25-27, 2007,www.i-joe.org/ojs

[6] A. Rojko, D. Hercog, and K. Jezernik, “Advanced control course with teleoperation in the mechatronics study”, *16th Int. Conf. on Electrical Drives and Power Electronics, EDPE 2007*, The High Tatras, Sept. 2007

[7] V. Fedák, T. Balogh, P. Bauer, and S. Jusko, “Virtual and Remote Experimentation in Motion Control”, Int. Conference on echatronics, AD University of Trencin, Faculty of Mechatronics, May 2008, ISBN 978-80-8075-305-4