AC-Battery with Active Harmonics Compensation

K. H. Edelmoser, Institute of El. Drives and Machines,Technical University Vienna, AUSTRIA, email: karl.edelmoser@tuwien.ac.at

F. A. Himmelstoss, Technikum Wien, University of Applied Science, AUSTRIA, email: himmelstoss@technikum-wien.at

Abstract

In the field of electrical solar power conversion the EMC is a major problem. In common single-phase inverter applications, especially in islanding arrangements the current of the solar array shows a remarkable ripple. This entails two significant disadvantages: Reduced over-all efficiency due to dynamic maximum power point mismatch and reduced lifetime of the panels due to an additional component stress. Furthermore, the output of the solar inverter shows significant distortions in it's voltage and current shape. Here an active compensator can be used to improve this behavior. But this can lead to several resonant effects and poor mains stability. The proposed approach discussed in this paper uses a combined structure of an active filter and active impedance control to fulfill the given requirements: Minimized input current ripple of the cells, string-optimized maximum power point tracking and optimal power quality of the supplying grid.

1. Introduction

Based on state-of-the-art switching mode solar converters arrangements for string operation, a solution with active input ripple minimization and optional active mains current filtering is proposed (c.f. Fig. 1).

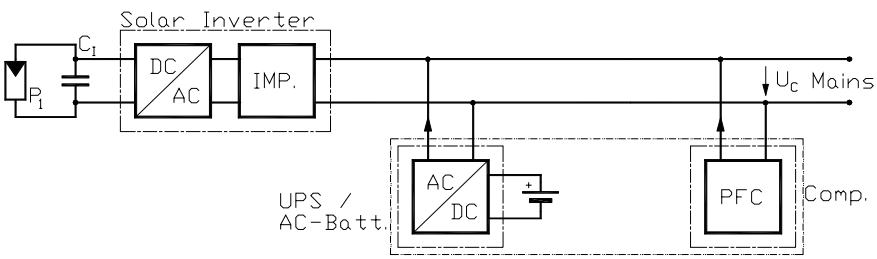

Fig. 1. Innovative solar inverter array with active ripple compensation of the power-line interfacing

The starting point of our investigations was a solar inverter for local grid application as depicted in Fig. 1. The converter with its output filter (IMP) was enhanced by an ac-battery with UPS functionality and an active compensator (PFC). The active mains compensation show a resulting high order equivalent circuitry and leads to weak damping especially at higher frequencies. The first approach to overcome this disadvantages is shown in Fig. 2.

For effective system optimization the controller of the compensator has to be fed directly from the inverter. This offers the further advantage of active solar current ripple minimization. Also a dynamic reduction ot the mains impedance can be realized directly from the battery source.

ISBN 978-3-8007-3505-1

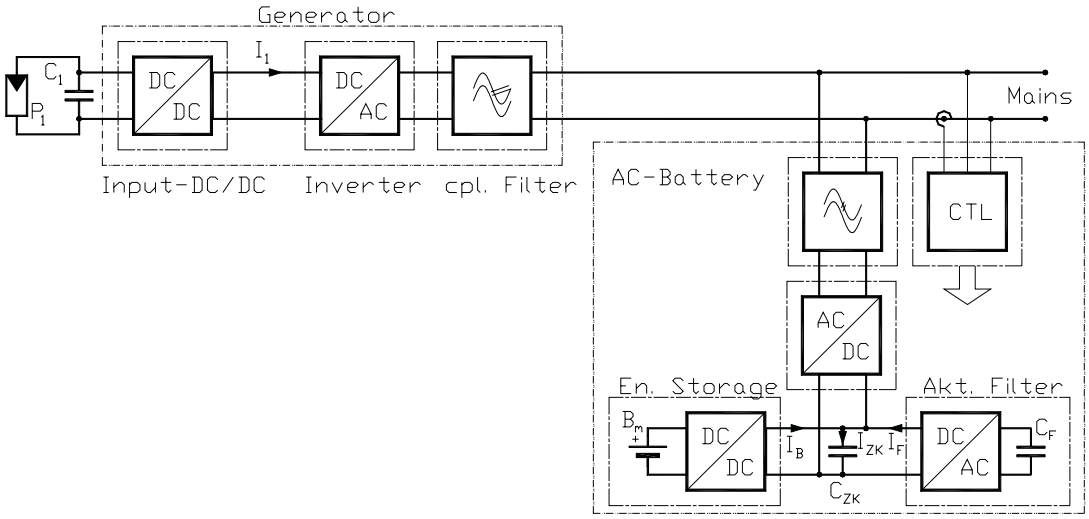

Fig. 2. Innovative solar inverter array with battery backup and active mains current ripple compensation

But this system shows one disadvantage: Here a combination of the battery stage and the compensator operates at an local DC-link and are fed by a common inverter from the mains. Unfortunately simulation results of the system behavior show poor stability of the mains and less effective harmonics reduction due to power fluctuation in between the compensator sources.

2. The system control

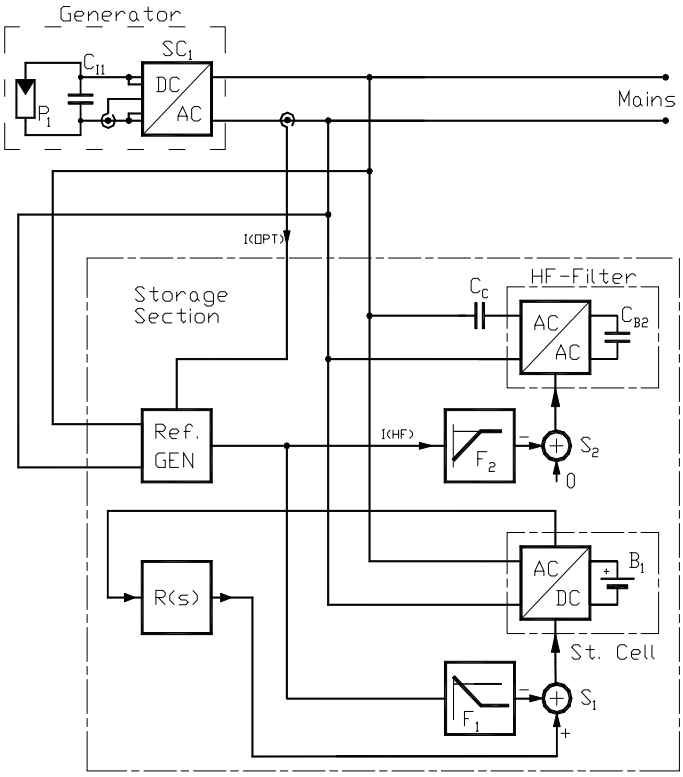

Fig. 3. Full parallel compensation: The storage cell and the filter stage uses different inverter stages and are operated fully in parallel using different power inverters

The big advantage of this topology is that the compensator topology operates at a reduced supply voltage at significantly increased switching frequency leading to minimized losses. The compensator injects a DC-free current shape into the load and therefore only the losses of the auxiliary converter have to be covered by the supply (c.f. Fig. 3). But on the opposite the required AC-coupling of the compensator forms a pole in the systems response leading to poor damping effects. This is common to parallel compensation systems and can hardly be overcome.

2.1. Two control methods, two power sources

The battery storage cell can be used to support the mains in case of flicker or current inrush. The power is drawn from the mains itself and therefore the charging efficiency has to be taken into considerations.

The high dynamic active filter is used to improve the mains voltage shape to minimize the harmonics and mains distortion. Here only short time storage maintained by capacitors is required leading to an improved efficiency. A further opportunity, the separation into low frequency and high frequency filter stages for further efficiency improvement will be discussed in another paper.

As can be seen from the topics above the most significant influence has the control method and the rules dividing the influence of the different stages to the load. In our case a frequency band separation was used to share the two stages and to maintain the load flow.

2.2. The Control Strategy

In general parallel and serial compensation can be established. In our case this can be done as well on the primary side as on the secondary side of the AC-battery. Simulation results show the best results with a system of series compensation on primary side when an improved (higher bandwidth) AC-inverter was used in conjunction with a simple mains filter.

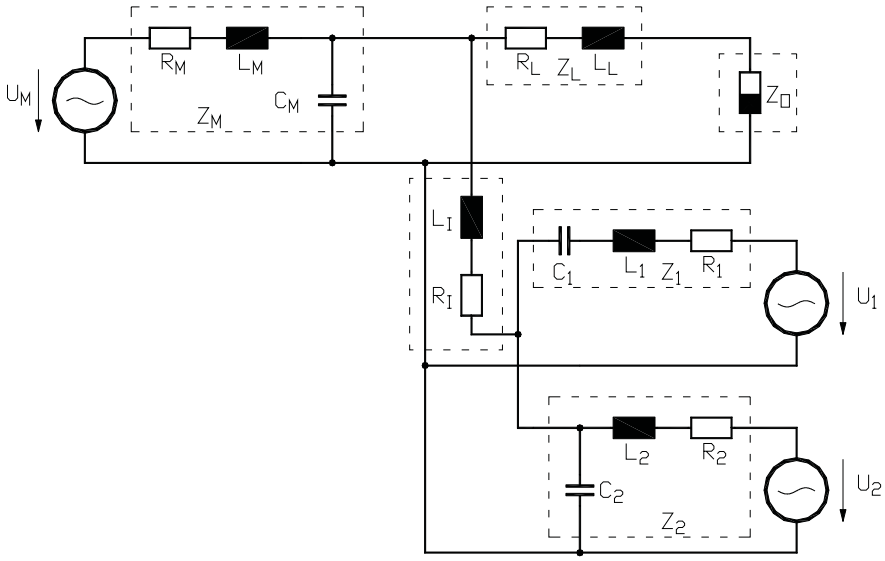

Fig. 4. Equivalent circuit of the battery buffered solar inverter system with active harmonics compensation using a parallel operating compensator. (U_1 powered by an energy storage capacitor, U_2 powered from the battery.)

Fig. 4 shows the first approach with parallel compensation on mains side and Fig. 5 shows the basic principle of the optimized solution, where series compensation was used. The mains coupling inverter and the DC-to-DC converters are operated in bi-directional mode.

The impedance of the filter can be calculated by

$$Z_1 = R_1 + j\omega L_1 + \frac{1}{j\omega C_1} \tag{1}$$

$$Z_2 = \frac{\left(R_2 + j\omega L_2\right)}{1 + j\omega R_2 C_2 - \omega^2 L_2 C_2} \tag{2}$$

$$Z_B = \frac{\left(1 + j\omega R_1 C_1 - \omega^2 L_1 C_1\right)\cdot\left(R_2 + j\omega L_2\right)}{\left(1 + j\omega R_1 C_1 - \omega^2 L_1 C_1\right)\cdot\left(1 + j\omega R_2 C_2 - \omega^2 L_2 C_2\right) + \left(j\omega R_2 C_1 - \omega C_1 L_2\right)} + R_I + j\omega L_I \,. \tag{3}$$

3. Improved compensation methode

To overcome the given disadvantages the power stage of the primary of the back-up battery and the compensator are divided into two fully autonomic stages with no direct power link on source side and connected in series. They are used to generate the DC-link voltage which then is converted to an AC feeding the mains (c.f. Fig. 5).

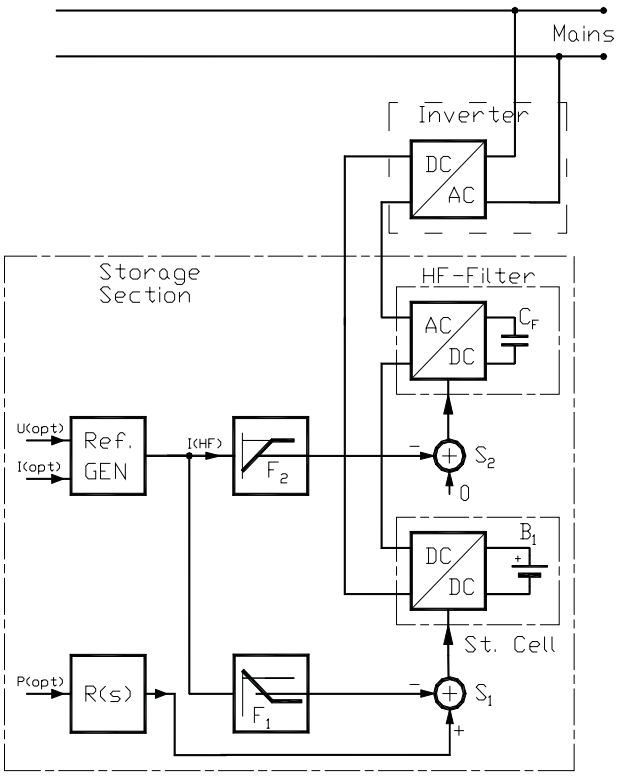

Fig. 5. Equivalent circuit to the battery buffered solar inverter system with active harmonics compensation built up as serial compensator

Due to the series compensator the battery power flow can be controlled dynamically to achieve a continuous power flow with minimized current ripple. The common AC-inverter for both stages is optimized in a way that the mains harmonics can be reduced.

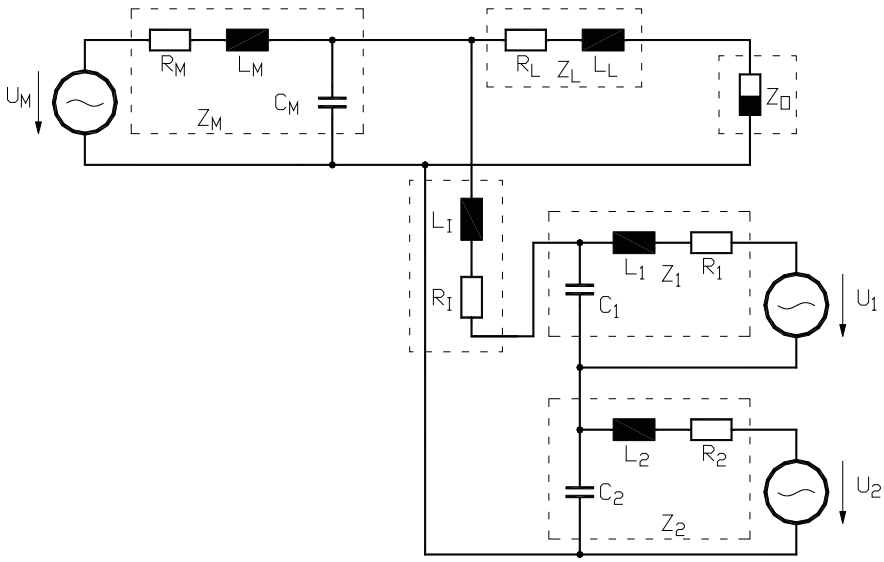

Fig. 6. Equivalent circuit to the battery buffered solar inverter system with active harmonics compensation build up as serial compensator.

As one can see in Fig. 6 the two stages can now be controlled separately. This gives the possibility to form an active impedance on the output side of the AC-battery cell which can be controlled depending on the state of the grid, the type of damping and the power flow.

The impedances are

$$Z_1 = \frac{\left(R_1 + j\omega L_1\right)}{1 + j\omega R_1 C_1 - \omega^2 L_1 C_1} \tag{4}$$

$$Z_2 = \frac{\left(R_2 + j\omega L_2\right)}{1 + j\omega R_2 C_2 - \omega^2 L_2 C_2} \tag{5}$$

$$Z_B = \frac{\left(R_1 + j\omega L_1\right)}{1 + j\omega R_1 C_1 - \omega^2 L_1 C_1} + \frac{\left(R_2 + j\omega L_2\right)}{1 + j\omega R_2 C_2 - \omega^2 L_2 C_2} + R_I + j\omega L_I \,. \tag{6}$$

One can see that the battery and the active filter stage formed by the sources U_1 respectively U_2 are connected in parallel to the primary source. But also one big disadvantage can be seen: The filter stage which delivers no power during one mains period unfortunately forms with it's blocking capacitor a pole in the transfer function leading to several problems in the system control.

4. System Simulation

As one can see in Fig. 7 the resonance effects of parallel compensated structures which depend on the type of load can lead to voltage overshoots especially when load is changing rapidly. To overcome this disadvantage the battery source can be controlled in such a way that the controller simulates an output impedance which compensates the resonance effects of the compensator working at higher switching frequencies. The results of such a system are depicted in Fig. 8. Here the filter, which stores 10% of the power fluctuations of the single phase line shows significant influence to the output characteristics. As one can see this gives a further point of investigations since this value can be lowered.

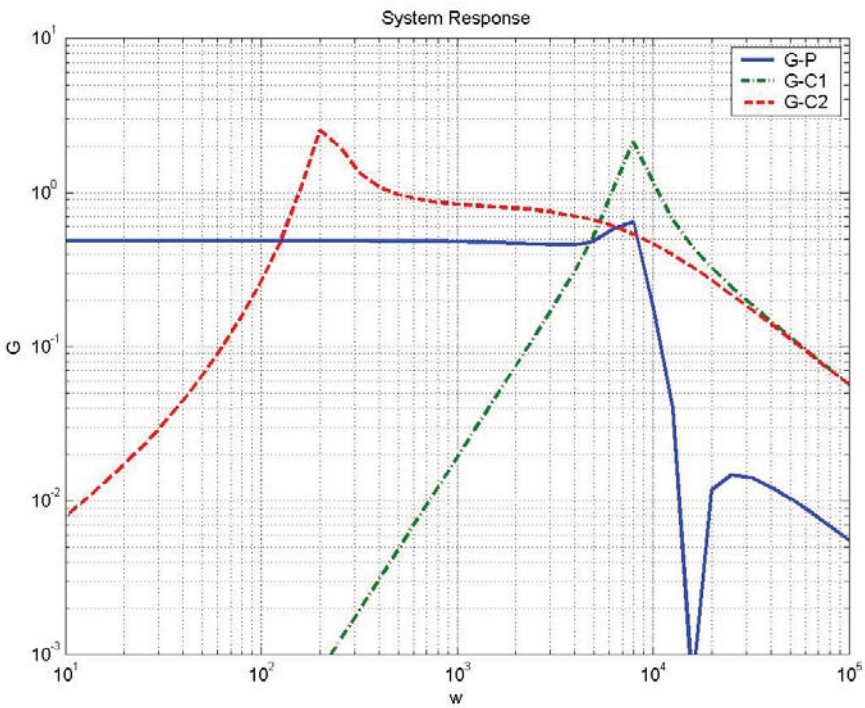

Fig. 7. Battery converter with active harmonics compensation: G-P: Output of the AC-inverters power path, G-C1: influence of a conventional active harmonics filter operating in parallel, G-C2: improved filter stage with reduced output impedance, both operating in parallel compensation mode

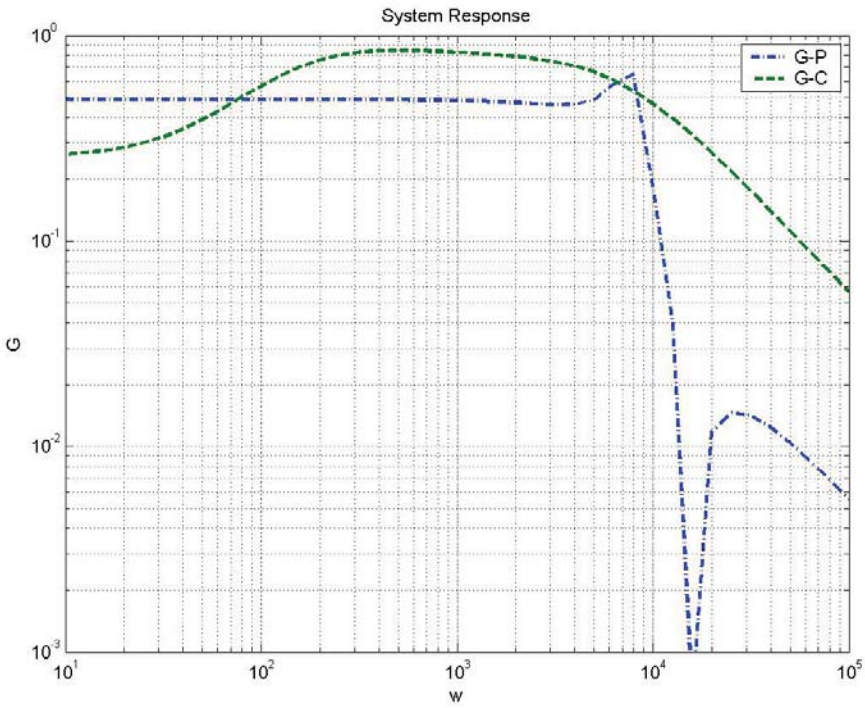

Fig. 8. Battery converter with compensator improvements: G-P: Output of the AC-inverters power path, G-C: optimized compensator with common power path using serial compensation

As one can see from Fig. 7 the compensator of the battery inverter forms a small (about 10%) virtual capacitive load at the AC-line. This fictive load was then compensated by the EMC-compensator leading to a stable mains voltage shape.

5. Conclusion

The proposed approach discussed in this paper uses a combined structure of an active filter and a back-up battery system to realize a very stable and rugged isolated grid with a rather low mains impedance. Intelligent control of the battery system can also be used to minimize the input current ripple of the cells when a cooperation with the solar inverter was established. This can help to realize string-optimized maximum power point tracking and optimal power quality of the supplying grid. The topology presented in this paper shows a remarkable improvement of the mains impedance and flicker behavior as well as a significantly enhanced EMC and over-all efficiency. Consequently, it is well suited for solar power inverter applications. The topology presented in this paper is a simple and effective solution for small to medium power grid coupled applications. The concept is well suited for wind-, solar- and renewable energy as well as for aerospace applications.

The proposed solution can be used to improve the input current ripple and therefore the component reliability of the solar cells as well as the mains harmonics and the efficiency in solar-, fuel cell- and battery-fed inverter applications by an active reduction of the source current ripple. As a result, the source is only loaded with a perfect DC-current, which helps to hit the maximum power point without any dynamic distortions. Here, the input capacitor can be decreased, because a common energy storage element is used operating at higher voltages with higher efficiency. On the other side the current ripple generated by the mains inverter can be kept under control and held below the limits. The proposed topology can be used as an alternative to multi-stage converters with a constant DC-link voltage and an active switching DC-to-AC inverter.

In the range of several kilowatts, which is typical for small islanding applications all power stages consists of simple half bridge arrangements. The converter can be operated at several 100kHz leading to a tolerable low output current ripple. Cheap TO-247 or even TO-220 or cheap surface mount packages can be used leading to a compact and efficient system design.

6. Literature

[1] Wai, R; Lin, C.: Active Low-Frequency Ripple Control for Clean-Energy Power Conditioning Mechanism, pp.: 1-10, Proceedings of the IEEE Transactions on Industrial Electronics 1-2010, Vol.: PP , Issue: 99.

[2] Veerachary, M.; Senjyu, T.; Uezato, K.: Maximum power point tracking control of IDB converter supplied PV system, pp: 494 – 502, Proceedings of the IEE Electric Power Applications 2001, Vol.: 148 , Issue: 6.

[3] Edelmoser, K.H.; Himmelstoss, F.A.: Battery Buffered Multi Filter Stage Solar Inverter, pp. 106 – 112, Proceedings of the 15th WSEAS International Conference on Circuits, Systems, Communications and Computers CSCC '11, Latest Trends on Circuits, July 14.-16. 2011, Corfu Island, Greece, ISBN: 978-1-61804-017-6.

[4] Hung, J.-C.; Wu, T.-F.; Tsai, J.-Z.; Tsai, C.-T.; Chen, Y.-M.: An active-clamp push-pull converter for battery sourcing applications, pp.1186-1192, Proceedings of the Twentieth Annual IEEE Applied Power Electronics Conference and Exposition, APEC 2005. Volume 2, March 6-10, 2005.

[5] Edelmoser, K.H., Himmelstoss, F. A.: Dual Filter Stage for EMI-Optimized Solar Inverter Array, Proceedings of the international Power Conversion Conference PCIM '11, May 17 - 19, 2011, Nuremberg / Germany, CD-ROM.