PubTrans4All

Public Transportation - Accessibility for All

Retrofit boarding assistance device for old IC-coaches

Dr. Bernhard RÜGER

Vienna University of Technology, Research Center for Railway Engineering

accessibility

- Is a today's **must** for train and infrastructure **operators**

- **Link** between the **platform** and **vehicle** is an essential part regarding **accessibility** within the mobility chain.

EU-project: Public Transportation – accessibility for all

- Project **founded** by EU with **FP7**
- **Goal:** Find a solution for improving the boarding situation
  - System integration into **existing coaches**
  - System shall be **standardized** for most existing coaches
  - System shall be used by **ALL mobility reduced** passengers
- **Consortium:**
  - *Coordinator:* Rodlauer Accessibility Consulting
  - *Universities* (Vienna University of Technology, University of Belgrade)
  - *Manufactureres* (MBB-Palfinger, Siemens Austria, Bombardier Transportation)
  - *Operators* (SBB, ÖBB, MAV, SZ, BDZ, NRIC, VBK)

Decission making process

- Who are the **relevant passengers?**
  - Who actually needs assistance?
  - Which kind of assistance is required?

- For which **boarding situations** assistance is required?
  - For which transportation systems?
  - For which vehicles?

Relevant passengers – people with reduced mobility

- Wheel chair user

Relevant passengers – people with reduced mobility

- Wheel chair user
- Walking disabled

Relevant passengers – people with reduced mobility

- Wheel chair user
- Walking disabled
- Visually impaired / blind user

Relevant passengers – people with reduced mobility

- Wheel chair user
- Walking disabled
- Visually impaired / blind user
- Hearing impaired / deaf persons

Relevant passengers – people with reduced mobility

- Wheel chair user
- Walking disabled
- Visually impaired
- Hearing impaired
- Elderly persons

Relevant passengers – people with reduced mobility

- Wheel chair user
- Walking disabled
- Visually impaired
- Hearing impaired
- Elderly persons
- Persons with baby prams

Relevant passengers – people with reduced mobility

- Wheel chair user
- Walking disabled
- Visually impaired
- Hearing impaired
- Elderly persons
- Persons with baby prams
- Passengers with luggage

Relevant passengers – people with reduced mobility

- Wheel chair user
- Walking disabled
- Visually impaired / blind user
- Hearing impaired / deaf persons
- Elderly persons
- Persons with baby prams
- Passengers with luggage
- And others

Relevant passengers – people with reduced mobility

- Wheel chair user
- Walking disabled
- Visually impaired / blind user
- Hearing impaired / deaf persons
- Elderly persons
- Persons with baby prams
- Passengers with luggage
- And others

Combinations!

size (children)
age/handicaps

Combination

Comeing back to the decission making process ….

- Who are the **relevant passengers?**
  - Who actually needs assistance?
  - Which kind of assistance is required?

Relevance for technical boarding assistance devices

User with devices	**wheelchair**, walking frame	**1-2**
Physical impaired	Walking disabled, with crutch or sticks, elderly, diminutive people	**2**
User with special needs	Visual and hearing impaired	**2-3**
General passengers	Passengers with luggage, children, pregnant, baby prams	**2-3**

Score	Meaning
1	Very important – critical to successful operation (“must have”)
2	Important – high benefit for users and operators (“nice to have”)
3	Less important – some benefit for users and operators, but not absolutely necessary

Comeing back to the decission making process ….

- For which **boarding situations** assistance is required?
  - For which transportation systems?
    - For which vehicles?

Analyses of existing systems

- Urban transportation
  - Tramways
  - Busses
  - Underground
- Local transportation
- Inter City (long distance) transportation

Urban transportation / local transportation

- „Closed systems“
  - Existing low floor systems with level boarding
  - High floor vehicles → operators plan changing to low floor soon
- Urban transportation offers **level boarding** (or soon will do)
- Local traffic → similar situation

Level boarding – existing technical devices

- gap bridging
  - moveable step
  - hinged step
  - bumper strip
  - manuel ramp

One step – existing technical devices

- ramps

two steps or more – existing technical devices

- Platform based lifts

two steps or more – existing technical devices

- Vehicle based lifts
  - Entrance doors wider than 90 cm
  - or entrance door not at the end of the vehicle

Requirements and needs of the operators

- **Easy and quick handling** (time need!)
- **Reliability**
  - System must work when it is needed
- **Costs** (implementation, operation and maintenance)
- **Majortity** of operator prefers **vehicle based** systems
  - Independent from the infrastructure

Decission making process ….

- For which **boarding situations** assistance is required?
  - For which transportation systems?
    - For which vehicles?

Remaining system (no solution till now):

→**Vehicle based** solution for **UIC coaches**

→Door width 80cm

→Doors at the end of the vehicle

Decission making process ….

Which system?

- Ramp?
  - Not possible because of height difference
- →Lift
  - Liftsystem can usually be used only for wheel chairs

Decision making process…

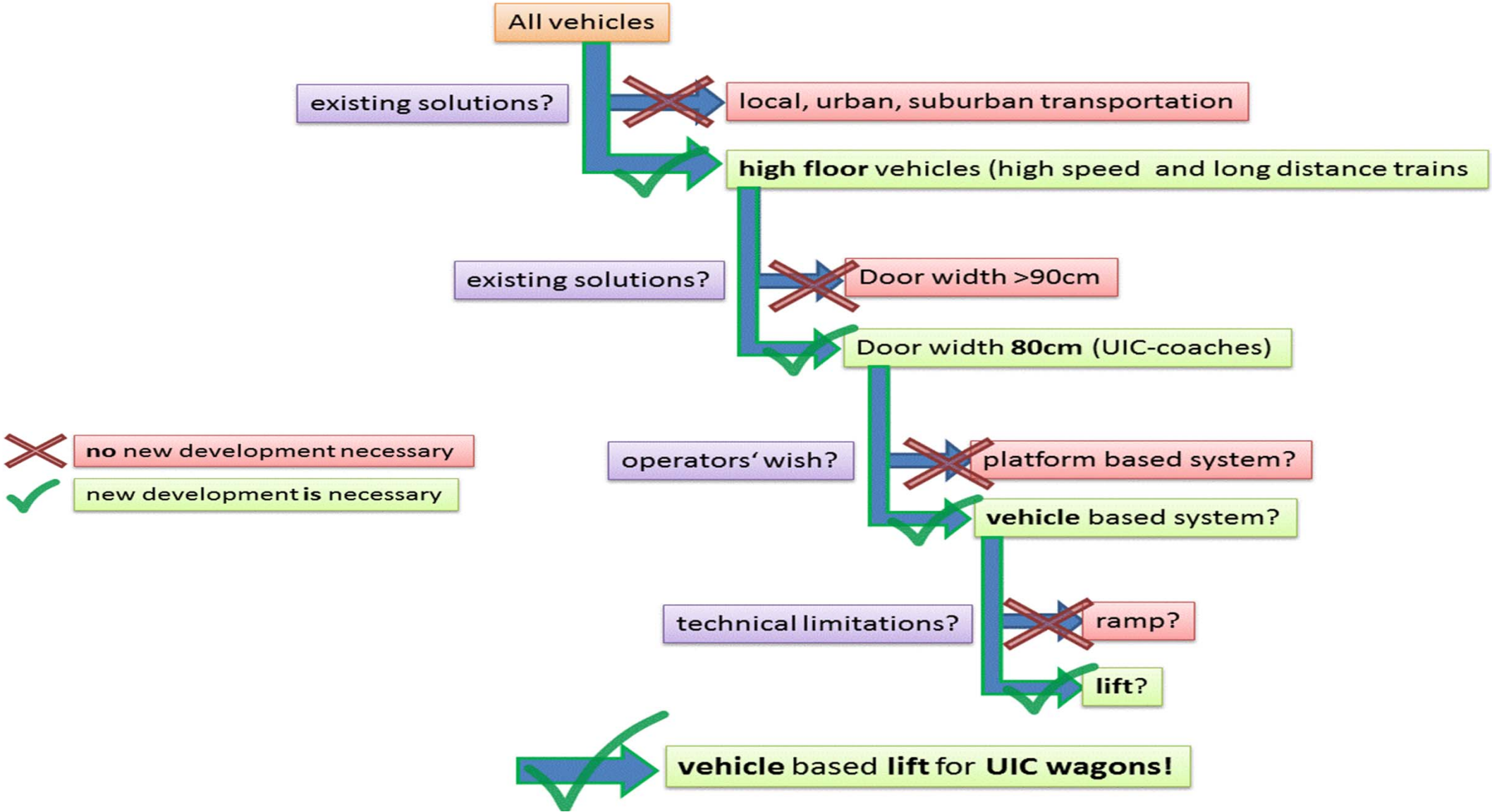

Decission making process ….

Accessibility for all passengers?

- for all other passengers **special service** for **everyone** who needs and **wishes assistance** is recommended
- Example: Atendo (RENFE)

UIC-coaches – challenge / Coupling devices

Classic trains

Multiple units

Classic coach – stairway / space limitation

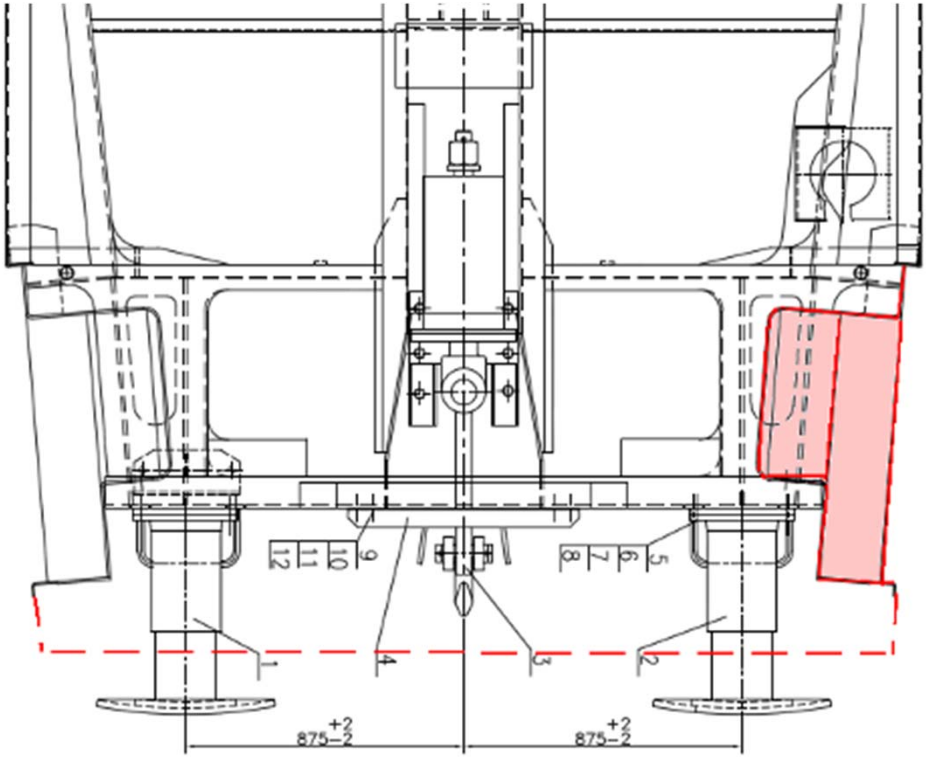

Stairway space

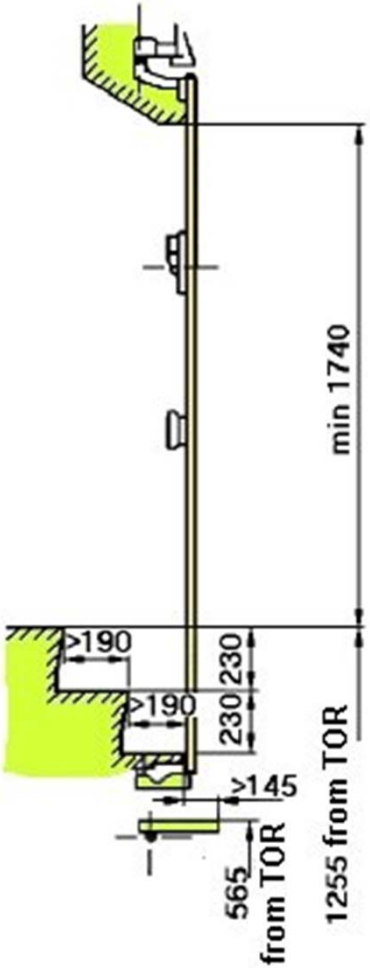

(UIC 560)

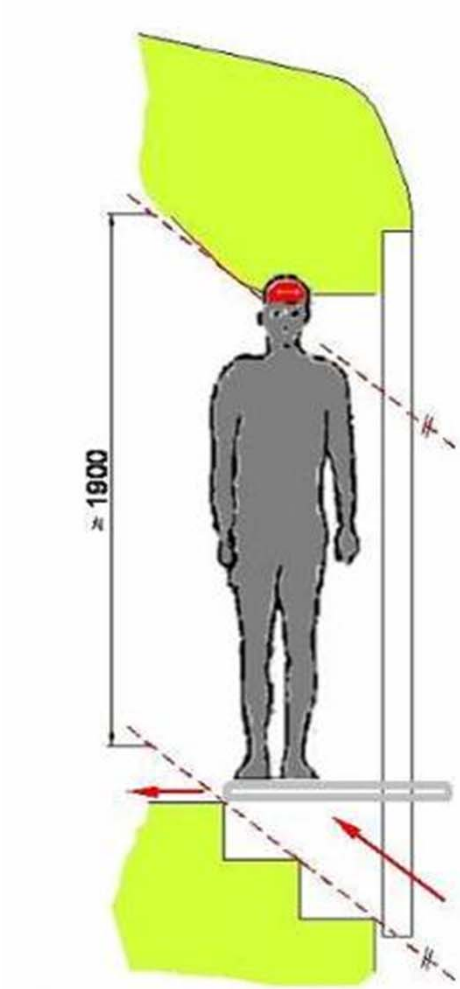

Large height difference and horizontal gap

Idea: Ramp ?

Idea: Step-lift

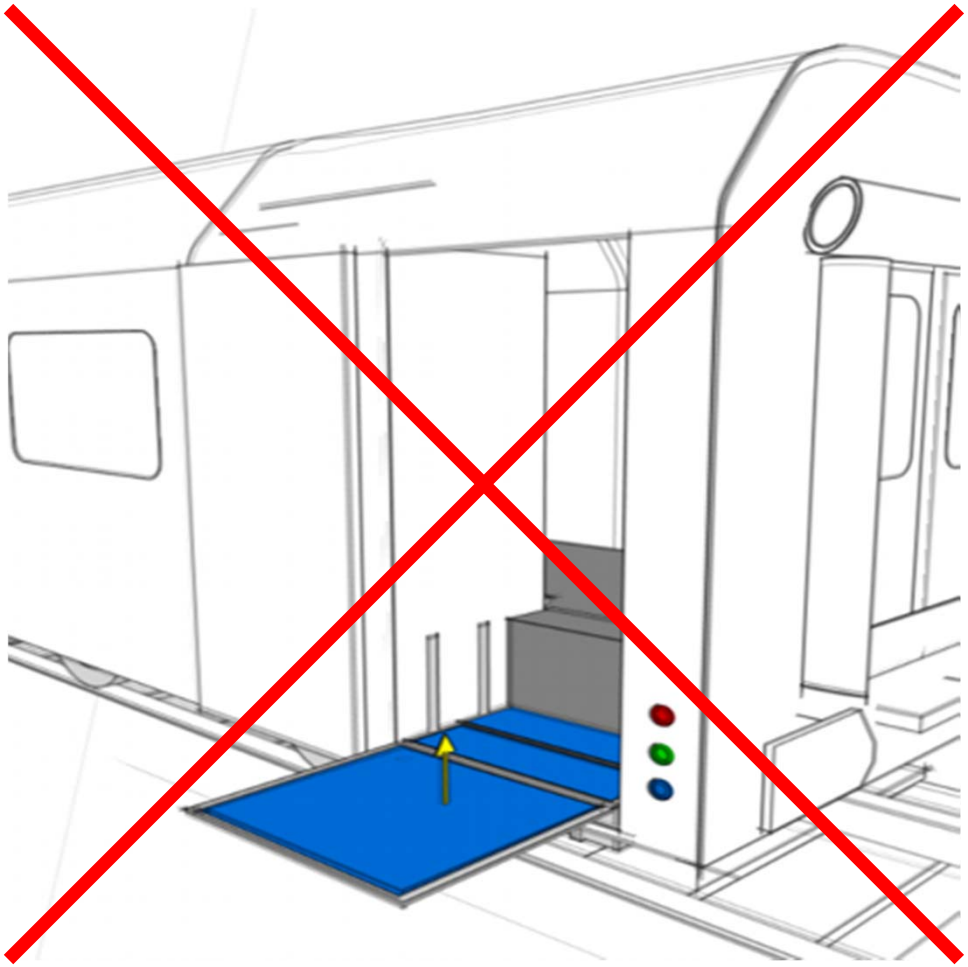

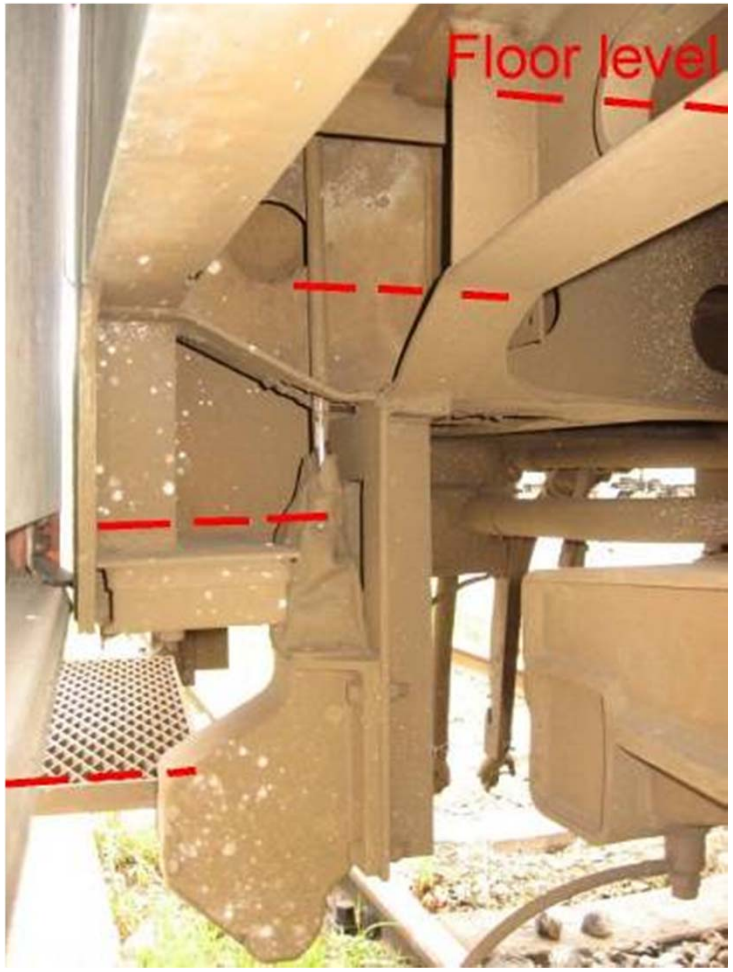

Idea: Extractable lift

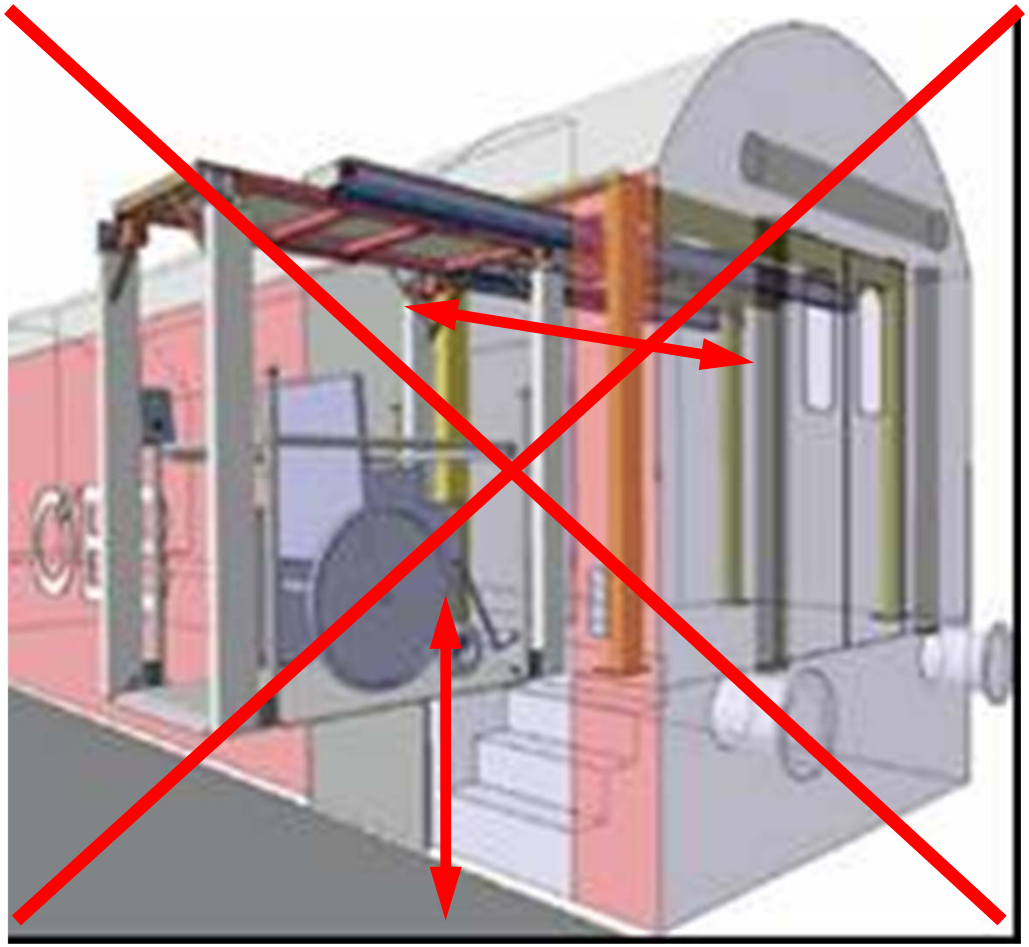

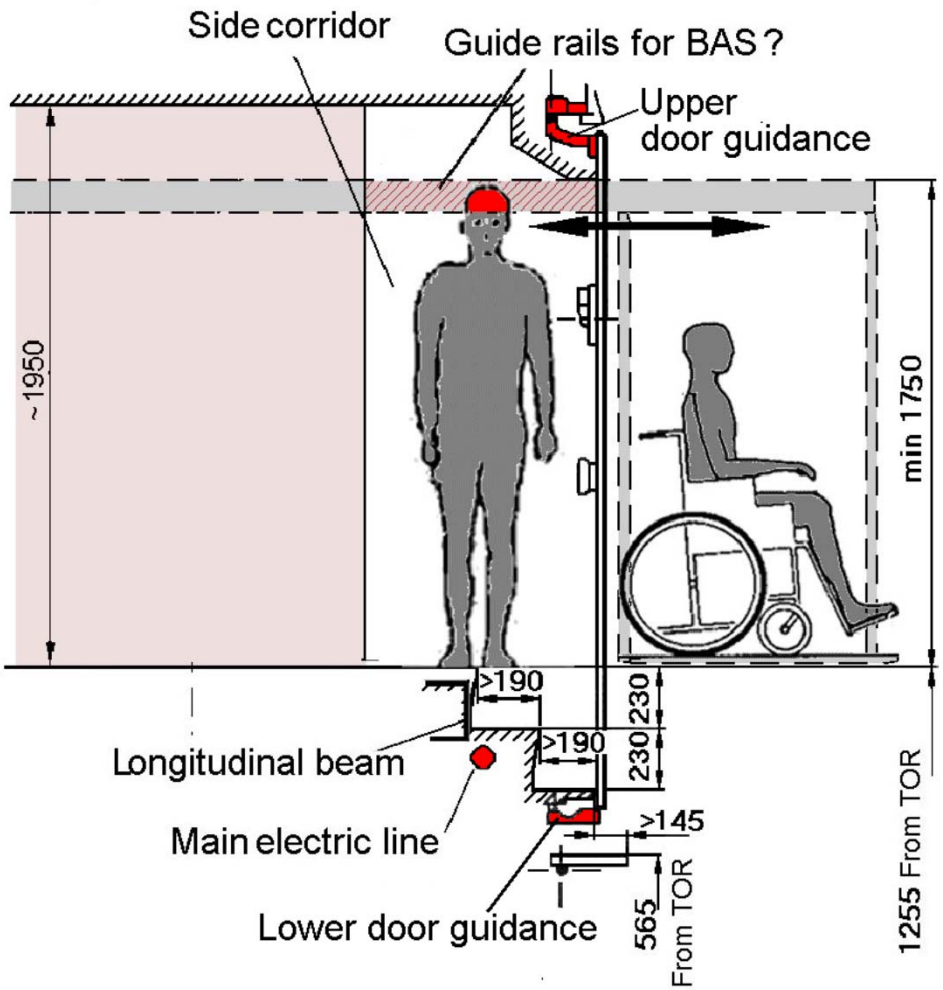

Idea: Linear lift?

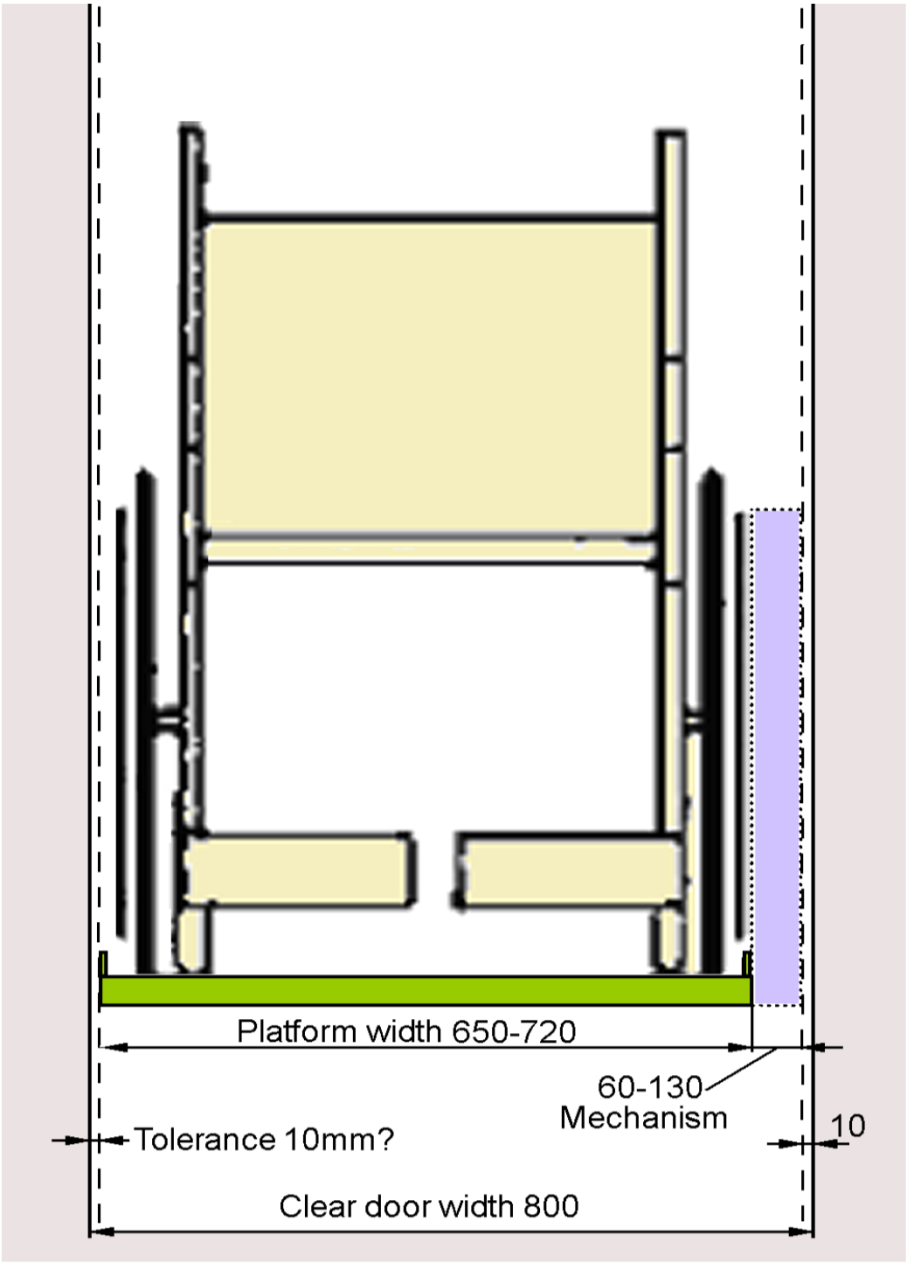

Idea: Twin pillar linear lift?

Selected solution: Swivel lift

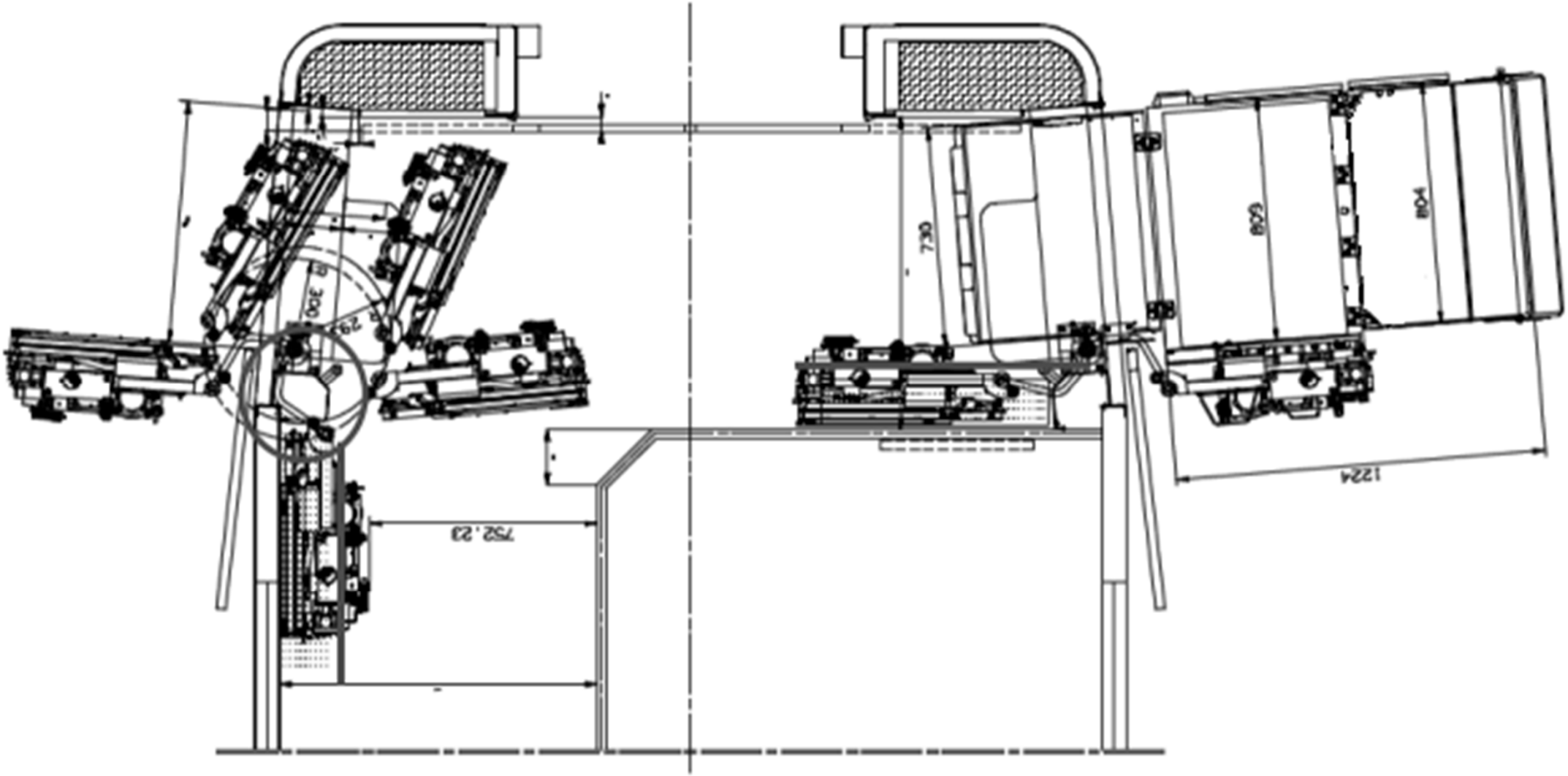

PubTrans4All –final prototype design concept – test mock up

- The concept of a swivel lift is not totally new
- But for classical UIC-wagon many adaptions were necessary

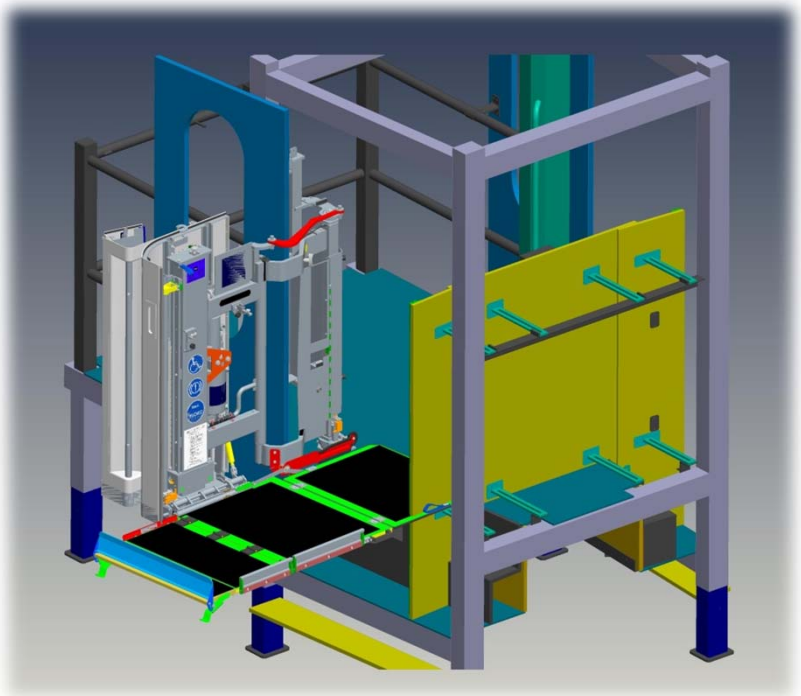

PubTrans4All –final prototype design concept

- The concept of a swivel lift is not totally new
- But for classical UIC-wagon many adaptions were necessary

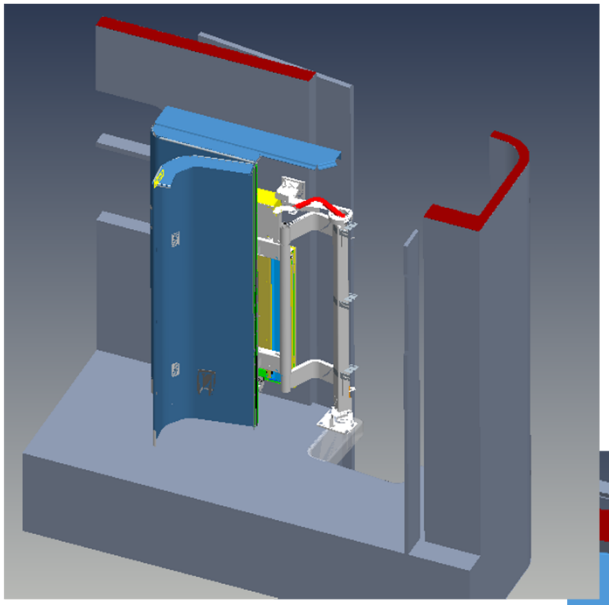

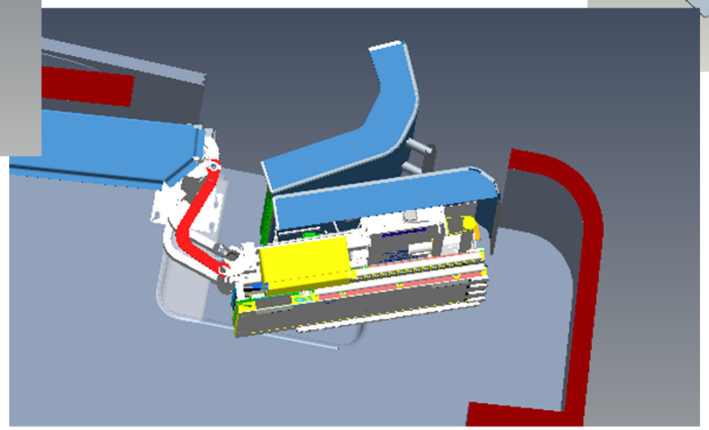

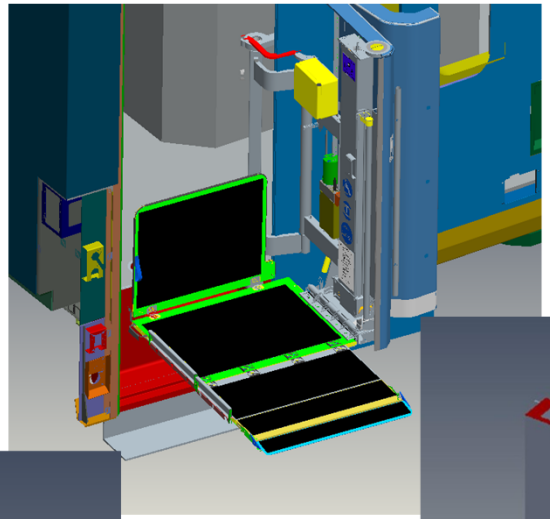

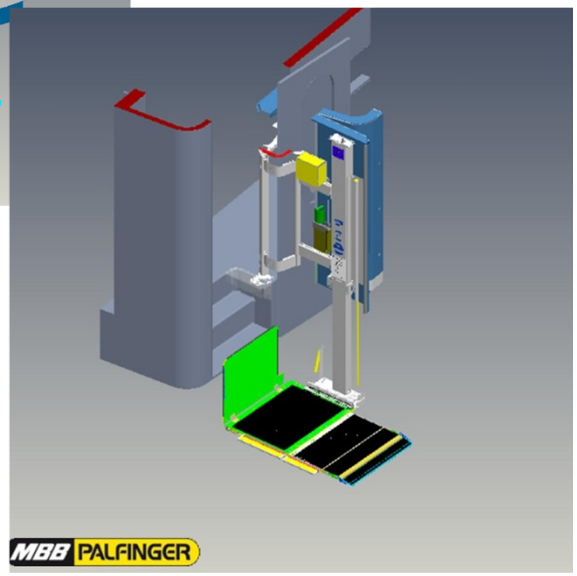

Space for stowed lift

Replacement of the mechanical connection between door mechanism and foldable step with pneumatic drive

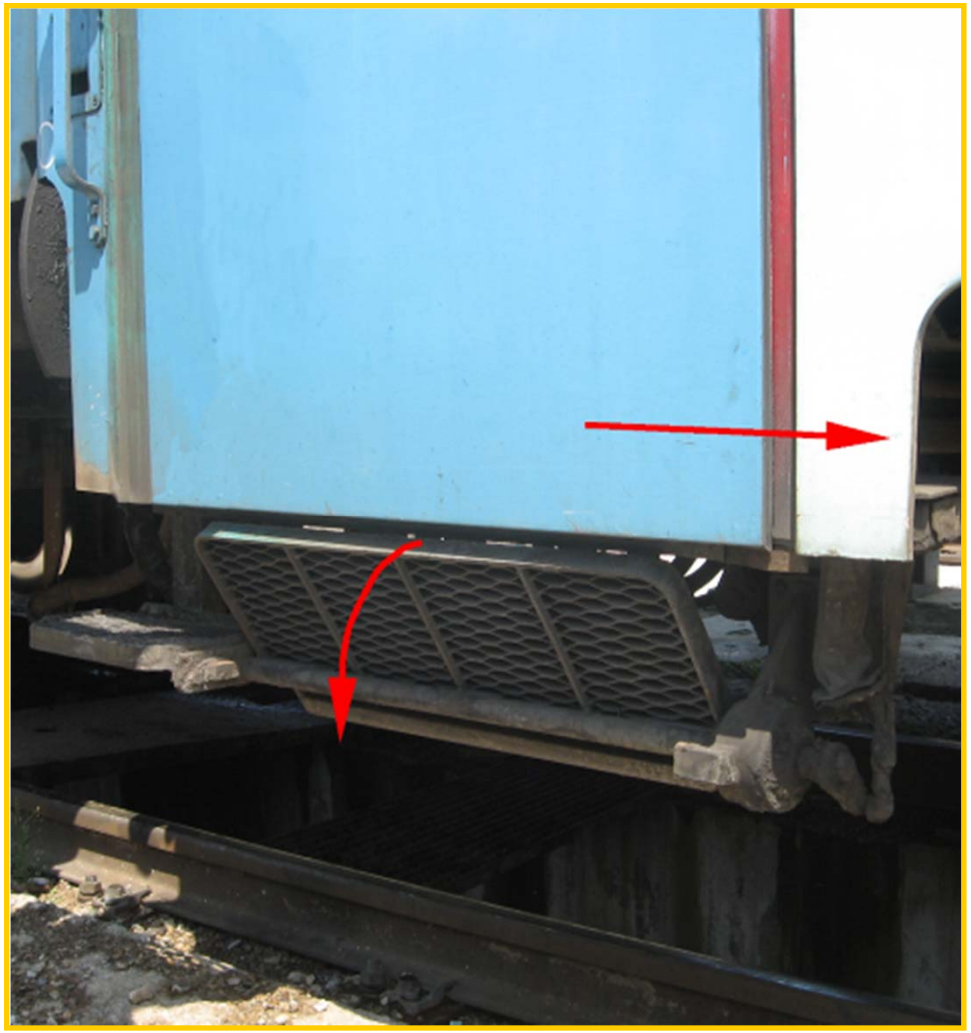

Widening of the passage clearance in side corridor

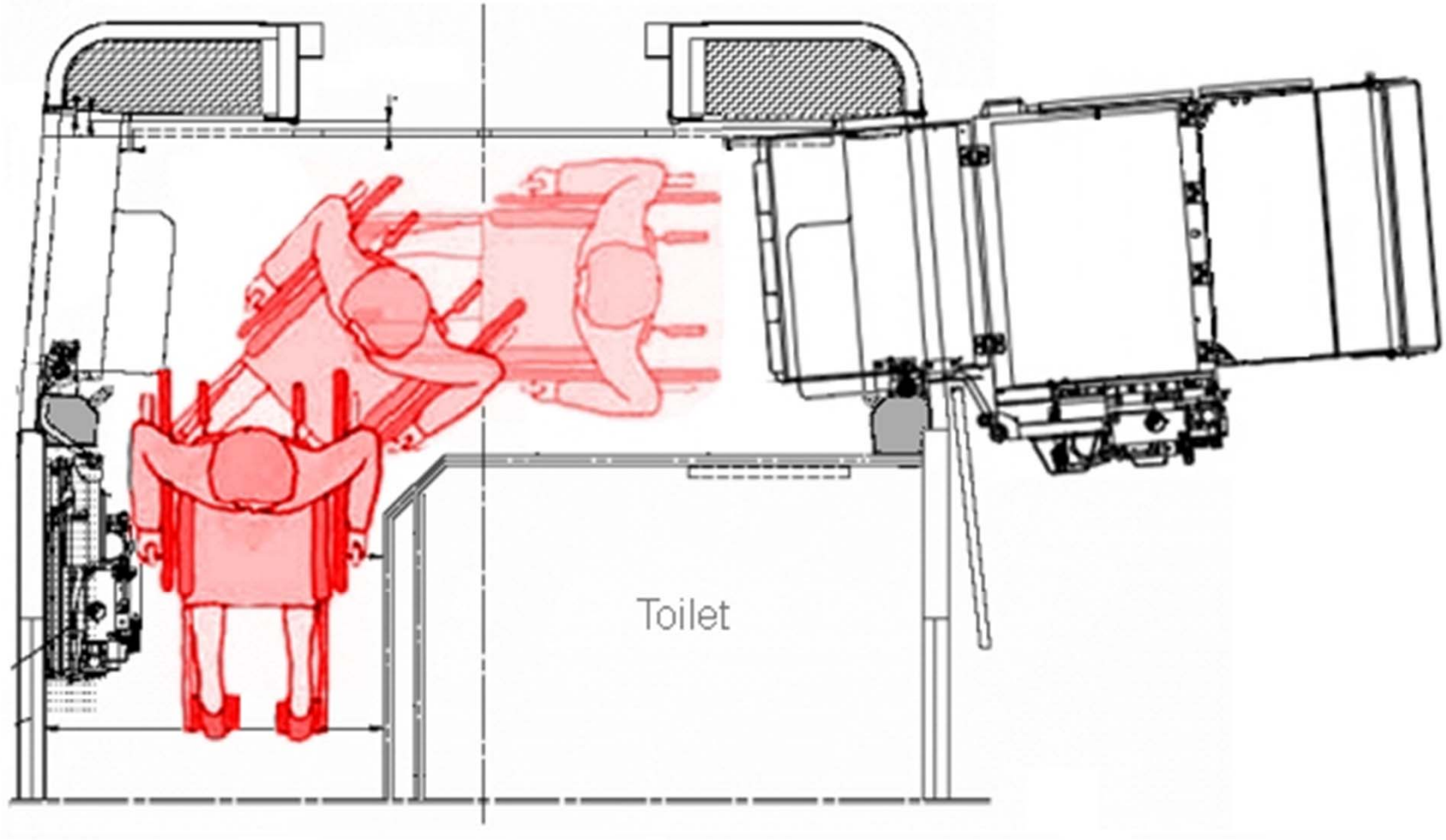

Restricted space in the entrance area

Some interventions on the wagon before lift installation are needed

(Example- BDŽ coach)

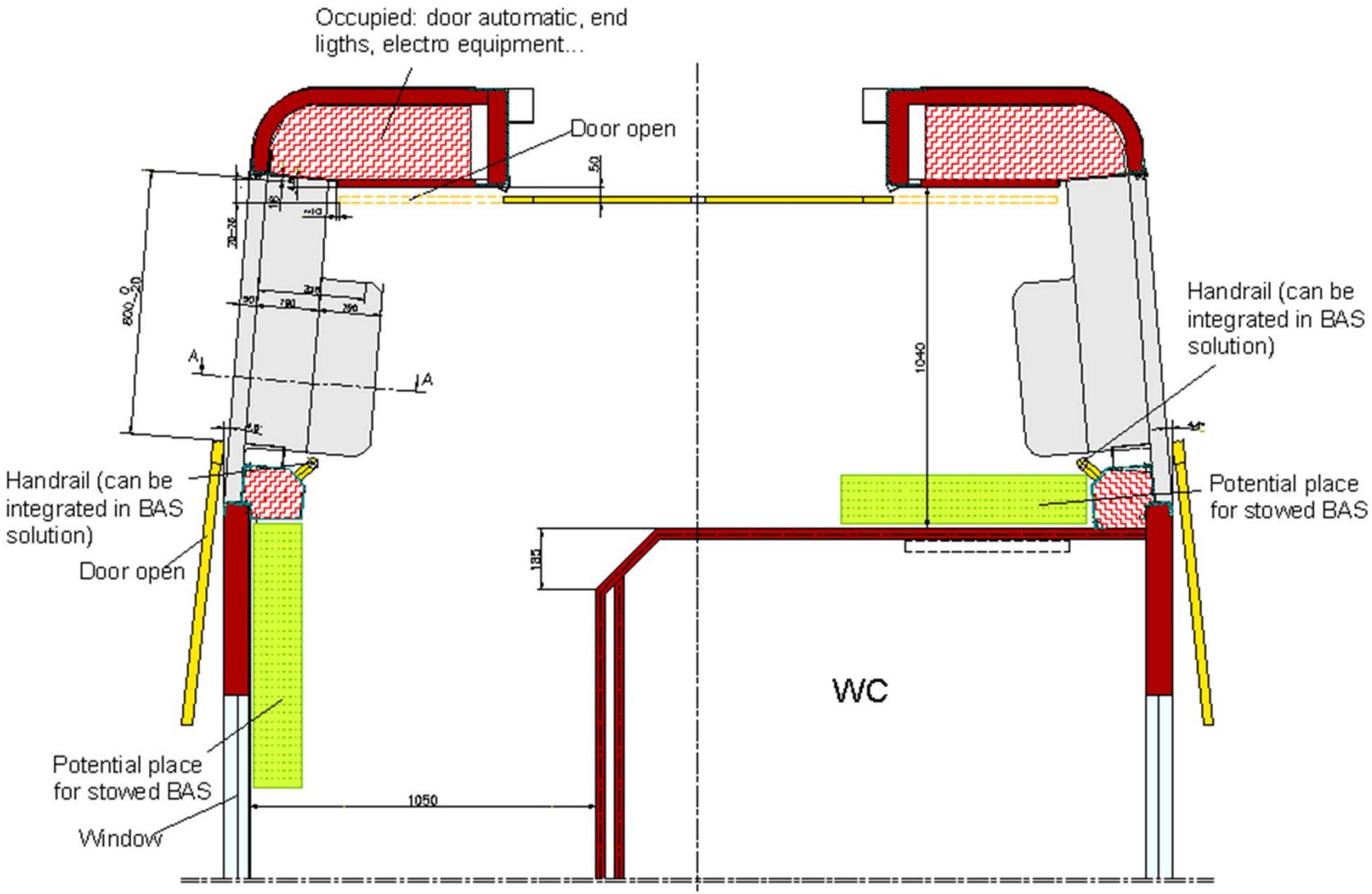

Interventions in entrance area (BDŽ coach)

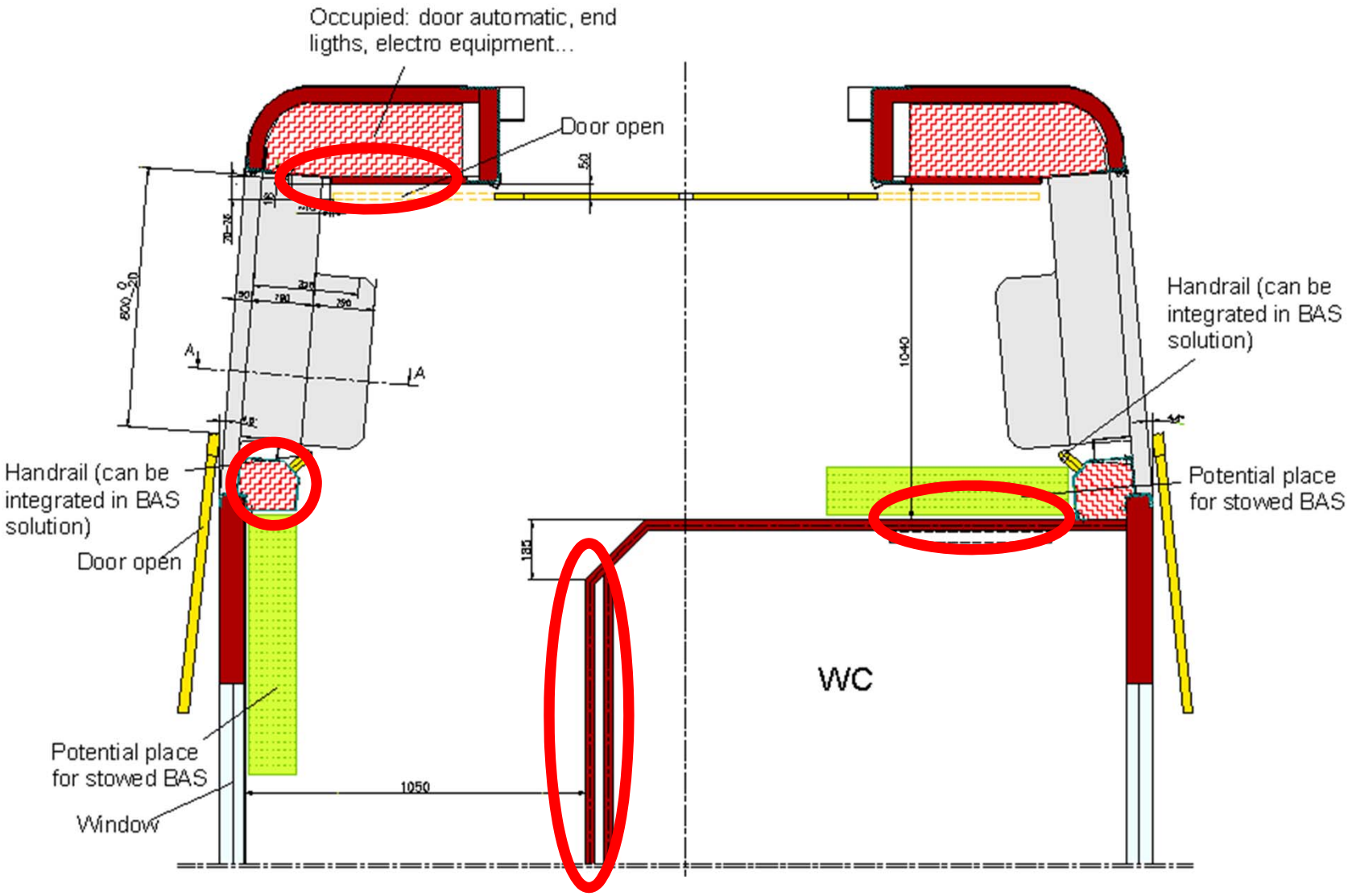

PubTrans4All

After laboratory testing the prototype has been incorporated in a UIC-wagon of the Bulgarian State Railways and tested on the railway network in Bulgaria.

The prototype of a BAS incorporated into the UIC-wagon has been displayed on the InnoTrans from 18th to 21st September 2012 in Berlin.

PubTrans4All - Test

Thank you for your attention!

www.pubtrans4all.eu