Category: Long Paper

UniCoMP - An Approach Towards Flexibility, Versatility and Liberty of Action on Stage

Authors: Oliver Hödl[1*], Geraldine Fitzpatrick[1]

Affiliations:

[1] Vienna University of Technology, Human Computer Interaction Group, Argentinierstraße 8/187, 1040 Wien, Austria

* oliver@igw.tuwien.ac.at

Abstract: Musicians have been exploring new ways of making music using different custom-built and modified instruments and additional devices during performances. However, these can increase the learning effort and reduce flexibility for the performer on stage. In this paper we present "UniCoMP" (Universal Control for Musical Performances), a wireless, easy-to-use and versatile system using off-the-shelf hardware and software to more flexibly play instruments and control devices during a performance. We describe the design of UniCoMP and the results of a pilot video-based evaluation to test its use during a live concert. We found that UniCoMP increased flexibility regarding playing instruments and controlling sound effects on stage and at the same time offered the artist freedom of movement for dramaturgic purposes. We also identified deficiencies in the user interface, leading to suggestions for future improvements and for additional evaluation.

One Sentence Summary: A study of using a smart phone as universal remote controller for musical performances.

1. Introduction

Musicians, and of particular concern here, guitarists, are increasingly engaged with multiple actions and devices in order to create entertaining stage performances. Playing an electronic guitar is usually done with both hands. Additionally musicians often use their feet to control devices on the floor for sound modulation. By stepping on different switches the guitarist activates or deactivates certain effects or chooses presets in multi-functional effect devices. While this opens a wide range of possibilities to change the sound in real-time during a performance, it also forces the guitarist to stay close to the effect device for operating purposes or return to it frequently after moving around on stage, limiting dramaturgical possibilities. Furthermore functionality is restricted to choosing among presets and not changing single parameters of effects.

There have been many attempts during the last two decades to offer more flexibility and better usability when using effects while playing electric guitar. For example, Engum attached a USB keypad with digits to a guitar to enable change presets directly from the instrument [1]. Furthermore he added an off-the-shelf touch pad underneath the pick-ups and strings to enable

modulation of the sound while playing directly at the guitar. A similar approach by integrating a touch pad in a guitar was developed earlier by the instrument maker Manson [2] for the guitarist of the band Muse [3]. Lähdeoja uses the data of three sensors integrated in his augmented electric guitar for dynamic control of signal processing [4]. Reboursière et al. developed another augmented guitar considering all parts of the signal chain from audio analysis to gestural control to audio synthesis [5]. Instruments other than guitars have also been augmented [6] and new instruments for playing music and controlling sound have been developed [7].

However, all these approaches involve either custom-built instruments or require that instruments be re-designed or modified with a more or less high amount of technological knowledge and effort for realization. Even for musicians it is problematic and time-consuming to readjust themselves after modification or to learn new instruments, as elaborated by Dobrian and Koppelman within the context of new interfaces for musical expression [8].

In this paper, we explore a different approach to 'live' effects modification that allows musicians to still use their usual instruments and allows them to move around on stage as they like. We report on a system called "UniCoMP" (Universal Control for Musical Performances), providing a guitarist with an off- the-shelf smart phone and laptop for controlling and modulating the sound of the guitar and remotely playing additional instruments like a synthesizer. As we use everyday devices UniCoMP is easy to afford and to assemble. Within this context we are questioning if we can achieve (1) flexibility regarding control of sound effects, (2) freedom of action on stage and finally (3) versatility of an easy-to-use system. To answer this, we use an auto-ethnographic approach [9, 10] conducted by the first author who is also a performing artist. This gave us the chance to perform a pilot evaluation of UniCoMP during an authentic public concert. The findings indicated that a conventional performance could be enriched by providing a tool that enhances the playing of the original instrument and adds new possibilities to play it and additional instruments.

The main contributions of this paper are: presenting UniCoMP as a wire- less, easy-to-use and versatile system for musical performances; and identifying directions for its further development based on experience in use.

We proceed with a usage scenario and the technical description, then describe the in-situ study at a live concert and finally discuss the evaluation.

2. Technical Design of UniCoMP

UniCoMP was designed against a scenario of use where the guitarist is playing a traditional electric guitar and a stage piano throughout a performance. The sound from the guitar is processed through an effect floor board and the sound for the stage piano is created through a software synthesizer on a laptop. The guitarist also wears a wrist mounted smart phone through which he can control both the sound of the guitar and the synthesizer.

To implement a UniCoMP prototype, we used common off-the-shelf devices and software for the purpose of versatility and minimization of efforts and costs. A description of all devices and the signal flow is presented in Fig. 1 and described in the following.

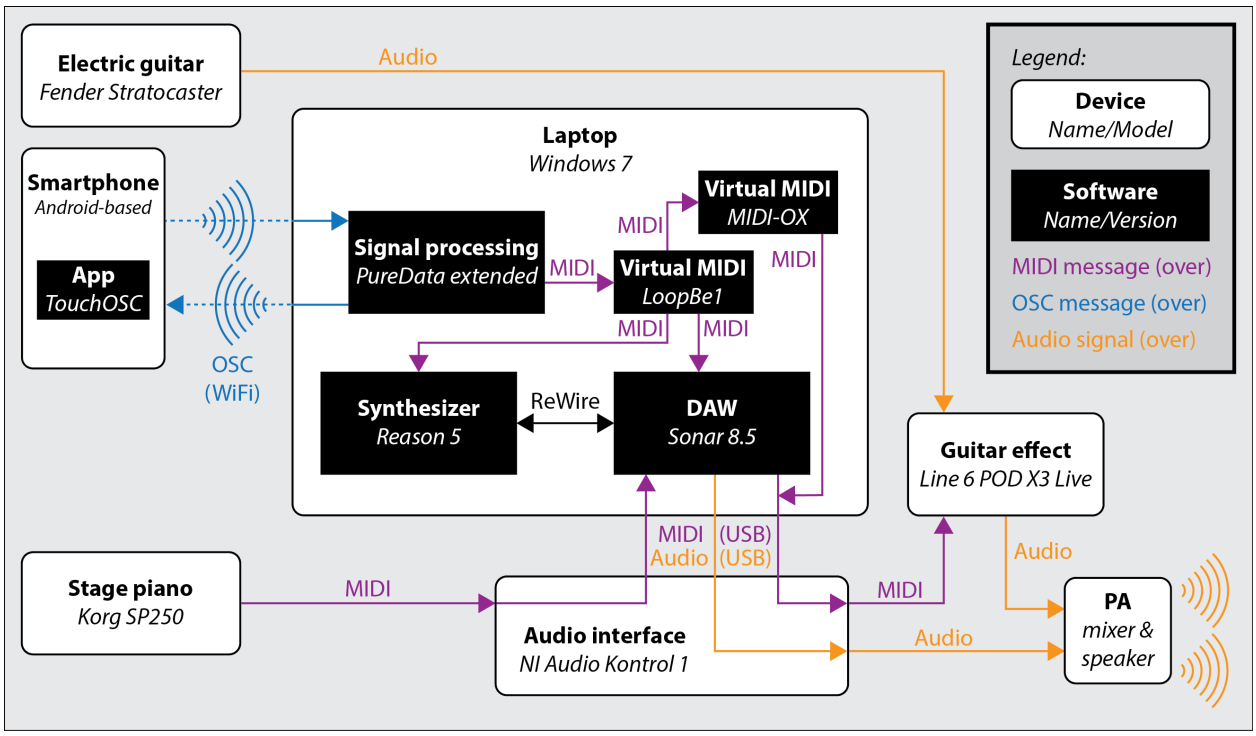

Figure 1. Signal flow within UniCoMP.

2.1 Instruments and Interfaces

The smart phone is designed to be mounted on the wrist of the right hand, comparable with a wristwatch, so as not to interfere with the guitar playing while also allowing easy access to the device. For our prototype, we simply used heavy-duty tape in combination with a hook and loop fastener.

The guitar itself is not modified at all. Thus, the performer can choose to use any guitar without additional configuration or effort. A common guitar effect floor board manages the sound modulation of the guitar. The stage piano is played as usual and its sound is synthesized by the laptop. Finally a simple off-the-shelf audio interface for the laptop distributes all signals from and to external audio devices.

2.2 Signal and Sound Processing

We used an Android-based smart phone which hosts the application "TouchOSC"[1] and sends OSC messages over WiFi from the smart phone directly to the laptop. All OSC messages - precisely signals of sliders, buttons and accelerometer data - that are received by the laptop are first handled by PureData (pd) [11] which then creates MIDI messages for further signal processing. Depending on the input, pd distributes them through virtual MIDI drivers to three different targets for controlling and generating sound: (1) a digital audio work- station (DAW),

[1] https://play.google.com/store/apps/details?id=net.hexler.touchosc_a [last accessed 10th October 2014]

(2) a software synthesizer and (3) directly through the audio interface to the guitar effect floor board.

The digital audio workstation (Sonar 8.5)[2] does the central sound control. The DAW has a built-in sequencer that has three main tasks in every song: (1) giving the beat to the musicians' in-ear monitoring, (2) playing pre-recorded samples, and (3) sending pre-defined MIDI messages to the guitar effect floor board. Furthermore the DAW uses the software synthesizer as a virtual instrument over the ReWire protocol to process MIDI inputs from the piano.

The software synthesizer (Reason 5)[3] generally provides sound synthesis to the DAW and apart from that listens to MIDI messages sent from TouchOSC through pd for playing and controlling sounds directly from the smart phone.

The guitar effect floor board (POD X3 Live)[4] is either controlled by foot as usual to change presets or additionally through TouchOSC which enables the control of various parameters directly at the device through MIDI messages.

2.3 Functionality

TouchOSC comes with several predefined interface layouts and easy customization of layouts. The mapping of the interface elements to parameters of the guitar effect device and the synthesizer is configurable in pd. Thus, UniCoMP is very flexible and adaptable.

According to the requirements of the songs that were going to be played in our particular performance, we chose a pre-defined layout with four toggle buttons and five sliders. This is shown in a screenshot of TouchOSC in Fig. 2, along with a description of the functionality of the buttons and sliders. The details of all functions and effects are beyond the scope of this paper and also not necessary to understand the general idea of UniCoMP. The interface can be customized easily according to the requirements of the songs for any particular performance. A more generic interface can also be created if needed.

To summarize UniCoMP can be used in various ways during a performance: (1) start and stop the DAW's sequencer for the playback of additional sounds and the metronome, (2) manipulate the software synthesizer's range wheel as the stage piano has none built-in, (3) use it as a standalone instrument playing a tone of the synthesizer and modify it by moving the smart phone accelerometer on the hand, (4) manipulate guitar effects remotely using the accelerometer while playing and (5) manipulate guitar effects remotely with sliders and buttons during a short break or while letting a tone fade away.

[2] http://www.cakewalk.com/products/sonar/ [last accessed 10th October 2014]
[3] https://www.propellerheads.se/products/reason/ [last accessed 10th October 2014]
[4] http://line6.com/legacy/podx3live [last accessed 10th October 2014]

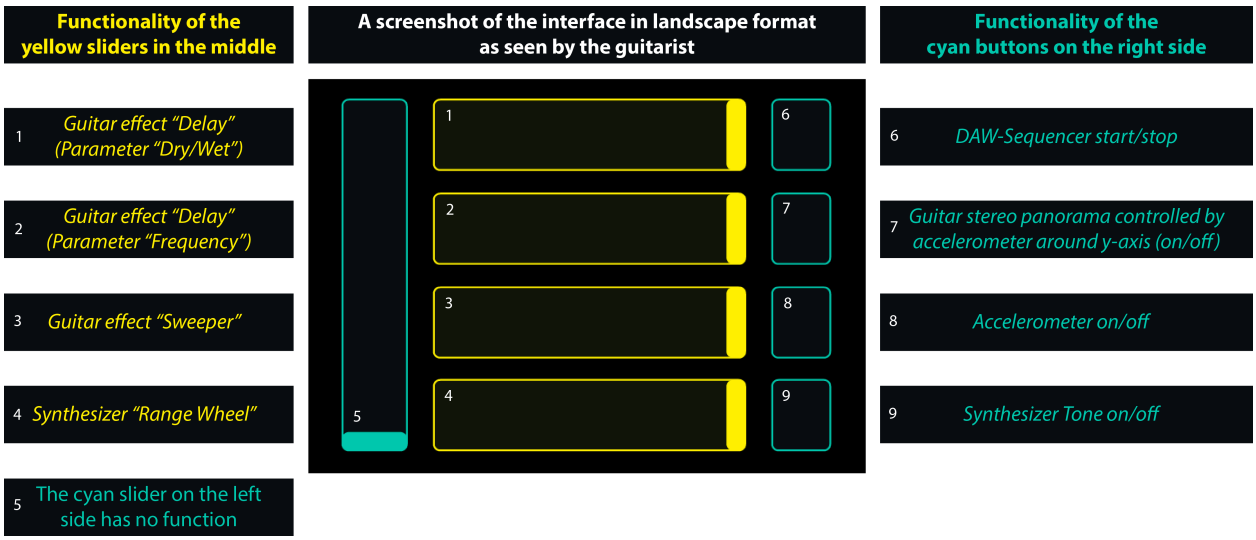

Figure 2. A screenshot of the UniCoMP TouchOSC interface as seen by the guitarist, with the description of sliders and buttons.

3 In-situ Study

We conducted an in-situ pilot study to evaluate UniCoMP during a public live concert of the artist (first author). A schematic overview of the venue, including the six-meter wide stage, is shown in Fig. 3. Every device in this overview has a corresponding device in Fig. 1.

On stage we have various stationary points of interest: (1) the drummer at the back of the stage in the middle, (2) the stage piano for playing the synthesizer and the laptop on the right side, (3) the guitar effect floor board on the left side, and (4) a scaffold for live-painting and show effects nearby. The musician, with the guitar and the smart phone on his right wrist, is able to move around on stage freely. This can happen quite frequently as part of the show when the guitarist moves between the three microphones, paints at the scaffold, controls the guitar effect floor board and plays the piano.

3.1 Methods

For the pilot study, we chose an auto-ethnographic approach, where the first author used the system during his live concert. The performance was video- recorded for later self-reflective evaluation. The main reason for choosing an auto-ethnographic approach [9] is the system itself. Although easy to assemble and handle it is still an early prototype and we wanted to test its stability in a live setting before giving it to other artists to use. Moreover the focus was on exploring UniCoMP's suitability and functionality during a performance rather than exploring particular experiences of different artists or of the audience (this needs more objectivity and will be subject to later studies).

While the system was used for the whole concert, for the evaluation we focused on one song on which to conduct an in-depth video analysis, similar to an approach by Reeves when studying interaction in public settings [12]. For this purpose the whole stage was video-recorded during the performance. The choice of the particular song was well-considered to test different

types of uses of UniCoMP while the artist moved around stage. The song starts with a pre-recorded spoken voice played by the sequencer running on the laptop while the guitarist paints at the scaffold. During the following major parts of the song until the end, the guitar and the synthesizer are played alternately. The performance of the song takes five minutes and twelve seconds which corresponds to the length of the recorded video we used for the analysis.

For the video-based analysis we conducted a preliminary review for basic structuring, a substantive review to discover and annotate important passages and finally an analytic review to study specific parts in detail following an approach suggested by Heath et al. [13]. We identified the major parts of the song, the corresponding location and movement of the guitarist and every use of the smart phone which was also logged in a log file directly in pd. This brought up certain key events. In addition to the video-based analysis we used the personal experience of the first author as the guitarist to extract meaningful information about the application of UniCoMP.

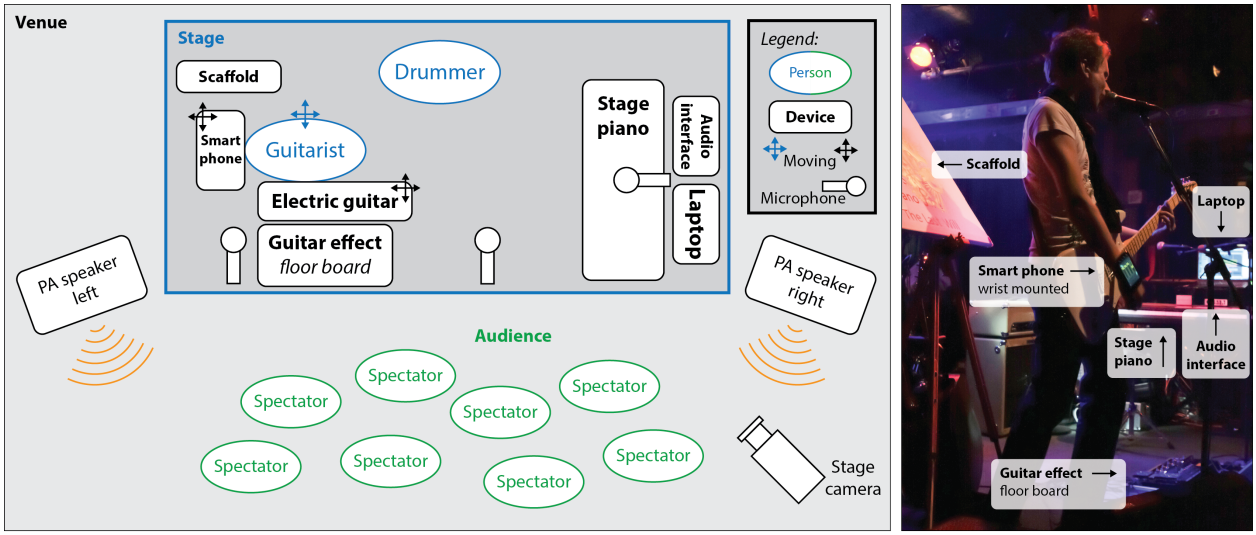

Figure 3. Schematic venue overview for the in-situ study and corresponding picture of the actual performance.

3.2 Results

Overall, the experience of the performance was a positive one for the artist. The system was relatively stable and the artist was able to (mostly) focus on the actual performance of the song, rather than on the device itself. He could also move around on stage according to dramaturgy and control devices remotely.

From video analysis, we created a timeline visualization of the performance, as shown in Fig. 4, and identified four key events, identified as red circles at the top of the timeline.

The operations resulting in the key events 1, 3 and 4 were planned in advance for testing purposes. Key event 2 was not supposed to happen. The events were:

Key event 1 (00:07): Starting the sequencer remotely from the other side of the stage while painting at the scaffold.

Key event 2 (01:43): Adjusting a slider that was manipulated accidentally somewhere between key event 1 and 2.

Key event 3 (02:39): After playing the synthesizer on the stage piano starting to play the synthesizer remotely with the smart phone while moving to the guitar effect floor board at the other side of the stage.

Key event 4 (04:44): Directly after playing the guitar, starting to play the synthesizer remotely on the left side of the stage and start to modulate the sound by moving the hand.

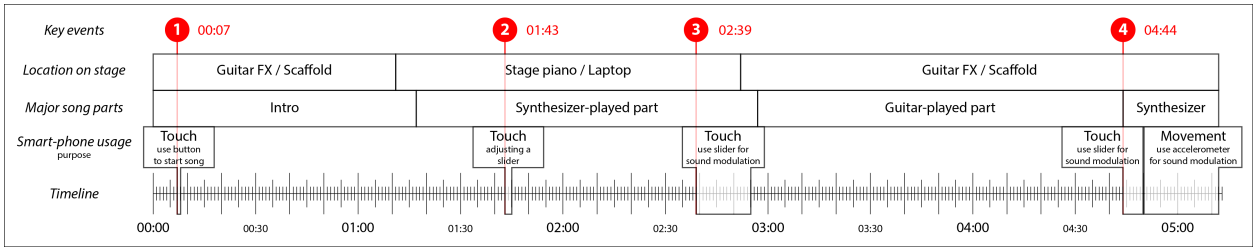

Figure 4. Timeline and analysis of the chosen song.

3.3 Discussion

The video-based analysis of the performance confirms that the application of UniCoMP gave the guitarist freedom to move around the stage according to dramaturgy rather than following given technical and spatial constraints. For instance operating the laptop, controlling the guitar effect floor board and playing the synthesizer immediately consecutively would have been impossible if the devices were distributed on stage and would have constrained dramaturgical aspects of the performance. The key events 1 and 4 show clearly the advantage of controlling devices or playing instruments remotely, when it would not have been possible otherwise due to timing constraints to physically move to a separate controller or instrument. Key event 3 underlines the flexibility provided for moving from one point to another on stage without interruption.

The experiences here suggest that the wrist-mounted smart phone might be a good option for operating purposes during playing an instrument. It is highly accessible at any time and barely disturbing while using the fingers for playing. However, key event 2 also revealed considerable issues with the interface, when a slider appeared misaligned accidentally. Maybe it was inattention of the guitarist, inaccuracy while controlling other interface elements or even another object activating the touch screen through contact. While we were not able to replicate the problem later, it demonstrates that such unexpected incidents can distract the performer suddenly, as experienced here. Even if the artist can immediately react and sort the problem, it can still influence playing or even force the guitarist to stop playing. During our performance the guitarist checked the interface preventively, recognized the problem, waited for a short break in the song which luckily came and readjusted the slider by hand. This finally happened at key event 2.

4 Conclusion

In this paper we presented UniCoMP as a system that enables musicians to play their existing instruments and control devices remotely and flexibly during a musical performance. For realization we used off-the-shelf hardware and software only and conducted a pilot evaluation during a live performance of the first author who is a performing artist. Revisiting our research questions, the findings indicate that UniCoMP increases flexibility regarding playing instruments

and controlling sound effects and enables higher freedom of action on stage. Finally the interface can be fully customized and mapped to any MIDI-compliant device which makes UniCoMP potentially highly versatile.

However, during evaluation we could also identify a certain susceptibility to unexpected errors that distract the musician and cause unwanted sound manipulation in the worst case. This points to the need for future work to make UniCoMP more fail-safe and hence available for other artists. Future evaluations could also explore the audience's experience of the performance, plus the use of UniCoMP by other artists using other instruments.

References:

1. Engum, T.: Real-time control and creative convolution. In Proceedings of NIME 2011, pp. 519–522.
2. Manson Guitars: http://www.mansonguitars.co.uk (viewed 10. October 2014)
3. MuseWiki: http://www.musewiki.org/Korg_Kaoss_Pad_KP2 (viewed 10. October 2014)
4. Lähdeoja, O.: An approach to instrument augmentation: the electric guitar. In Proceedings of NIME 2008, pp. 53–56.
5. Reboursière, L., Frisson, C., Lähdeoja, O., Mills, J.A., Cècile, P., Todoroff, T.: Multimodal Guitar: A Toolbox For Augmented Guitar Performances. In Proceedings of NIME 2010, pp. 415–418.
6. Overholt, D.: The Overtone Fiddle: an Actuated Acoustic Instrument. In Proceedings of NIME 2011, pp. 30–33.
7. Fels, S., Lyons, M.: Creating new interfaces for musical expression: Introduction to NIME. In SIGGRAPH09 Courses, ACM Press 2009, pp. 1–158.
8. Dobrian, C., Koppelman, D.: The 'E' in NIME: Musical Expression with New Computer Interfaces. In Proceedings of NIME 2006, pp. 277–282.
9. Ellis, C., Adams, T.E., Bochner, A.P.: Autoethnography: An Overview. Forum: Qualitative Social Research 12(1), 2011.
10. Eriksson, T.: Being native distance, closeness and doing auto/self-ethnography. ArtMonitor 2010.
11. Puckette, M.: Pure Data. In Proceedings of ICMC 1996, pp. 224–227.
12. Reeves, S.: Designing interfaces in public settings. Springer 2011.
13. Heath, C., Hindmarsh, J., Luff, P.: Video in Qualitative Research. Sage Publications Ltd 2010.