Insulation monitoring of three phase inverter-fed ac machines based on two current sensors only

C. Zoeller, M.A. Vogelsberger, P. Nussbaumer, Th.M. Wolbank

Abstract – **The demand of monitoring systems to prevent a breakdown of electrical machines is continuously increasing. Regarding economic issues, usage of system resources and additional components to establish monitoring is restricted. With the method proposed, the evaluation of the stator insulation condition of all three phases is possible using only the two current sensors already available in modern drive systems. The analyses of the transient part of the current response to voltage step excitation give evidence of a possible change in the insulation system. The degradation of the insulation health state is linked with a change in its capacitance, which in turn influences the electrical high frequency properties of the machine and as a consequence the transient part of the current signal resulting from a voltage step. To enable the monitoring of the phase with the missing sensor, a simple summation of all measured currents does not deliver enough accuracy for insulation monitoring. The non-measured phase however, can still be monitored by a special excitation sequence and signal processing without significant deterioration of sensitivity compared to the results if a sensor is available. Further, the influence of temperature and moisture on the proposed method is analyzed.**

Index Terms--**AC motor drives, Insulation monitoring, Fault detection, Induction machines, Insulation degradation, Switching transients**

I. Introduction

In modern traction drives fast switching inverters are used to supply the ac machine, typically asynchronous induction machines (IM) or permanent magnet synchronous machines (PMSM). In public and cargo transportation systems a reliable and safe operation of the drive is demanded to prevent high costs through a breakdown. With an amount of 35%, stator related faults are specified as the second most common faults, causing a machine outage [1]-[2]. Furthermore about 70% of these stator faults are based on a failure of the insulation system. Thus, monitoring systems analyzing the stator insulation condition seem to be a good approach to prevent sudden breakdown. In [3] and [4] many condition monitoring and fault diagnosis methods are summarized.

In literature different stresses like electrical, thermal, thermo-mechanical and mechanical are considered responsible for a reduced insulation lifetime [5]. Also the environmental influence, e.g. through high temperature gradients machine and surrounding air, moisture etc., stresses the insulation system. It is common that the process of insulation degradation is proceeding very slowly, sometimes even over decades. This offers the possibility to monitor the insulation state over years with analyzes of the trend. The detailed effects of a degraded insulation in a machine are not clarified until now. Investigations on coil specimen, representing a stator segment, show that thermal-electrical aging realized through a high number of operating hours with a temperature above the upper-limiting temperature (specified for the insulation class) and vibration exposure causes a change in the capacitance value of the specimen [6]-[7]. According to [8] a change in the turn-turn capacitance of a form wound coil after stress through thermal cycles is detectable. The capacitance is in all cases usually considered as the dominant parameter for insulation health state evaluation. Further, a degraded insulation at first leads to a turn to turn fault and finally to severe ground faults as described in [9].

With inverter-fed machines the insulation is strained by the high voltage change rates and occurring overvoltage through improper cable impedance mismatch, which can reach 2-4 times the DC-link voltage [10]. This can accelerate the insulation degradation process.

Most monitoring methods have in common that special equipment or knowledge of appliance and analysis are needed. With the proposed method in [11] insulation condition monitoring only based on the current sensors signals is shown. The technique is based on analysis of the transient part of the current sensor signals after voltage step excitation through a switching transition of the inverter from lower short-circuit to active switching state. The same sensors are also needed for the control of the machine. Resulting to this excitation of the single phases, changes in the transient signal ringing of the current sensors responses occur, depending on the actual insulation health state. Normally, one current sensor is required for every phase to analyze this transient process. With regard to the economic view a reduction of system components is preferred and thus usually only two sensors are available. This puts additional challenges to the insulation monitoring method. An accurate reconstruction of the missing phase from the assumption that the sum of all phase currents is zero is only possible in the low frequency range. Thus in the following a technique is presented enabling insulation state monitoring even in the non measured phase with no significant deterioration of sensitivity. This technique (using only two current sensors) can be seen as one extension and practical realization of patent (AT511807 B1), applied to the practical restrictions in traction drives. Additionally, the influence of moisture and temperature on the proposed method is analyzed. The

The work to this investigation was supported by the Austrian Research Promotion Agency (FFG) under project number 83 84 78.

C. Zoeller is with the Institute of Energy Systems and Electrical Drives, Vienna University of Technology, 1040 Vienna, Austria (e-mail: clemens.zoeller@tuwien.ac.at).

M.A. Vogelsberger is with Bombardier Transportation Austria GmbH, GSC/PPC-Drives VI, 1220, Vienna, Austria (e-mail: markus.vogelsberger@at.transport.bombardier.com).

P. Nussbaumer is with Bombardier Transportation Switzerland Ltd, GSC/PPC-CoE2 ZH, 8050, Zürich, Switzerland (e-mail: peter.nussbaumer@ch.transport.bombardier.com).

Th. M. Wolbank is with the Institute of Energy Systems and Electrical Drives, Vienna University of Technology, 1040 Vienna, Austria (e-mail: thomas.wolbank@tuwien.ac.at).

978-1-4799-4389-0/14/$31.00 ©2014 IEEE

measurements are conducted on a test stand with a special type 1.4 MW induction machine.

II. General Aspects, Measurement Procedure and Signal Processing

The basic insulation health state monitoring method with three sensors is based on analysis of the transient current reaction to a step voltage excitation of all phases. With the inverter, every phase can be excited separately, e.g. with a switching transition from an inactive to an active inverter output state realized on a special test stand consisting of a combined real-time controller, Field Programmable Gate Array (FPGA) and fast sampling ADCs from National Instruments, programmable in LabVIEW.

The fast rising voltage steps in combination with the improper terminated supply cables from the inverter to the machine cause transient overvoltage on the end of the line. This ringing with exponential decaying behavior is also observable in the current sensors response to a step excitation. In Fig. 1 the first 70μs of the current response (solid blue trace) to a step excitation from lower short circuit to a positive switching state in the corresponding phase is shown. The current slope results as a response to a voltage step (dashed red trace) realized by the inverter to the current less and demagnetized machine. The data is recorded with a standard industrial current sensor (hall-effect based closed loop sensors) with a specified bandwidth of DC-150 kHz and a maximum *di/dt* of 50A/µs. Though the frequencies appearing in the transient current response are partly outside the specified frequency range, the signal still contains useful information on changes in the insulation system.

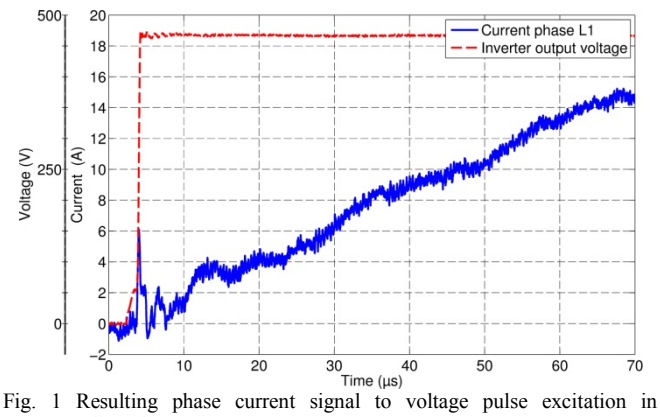

Fig. 1 Resulting phase current signal to voltage pulse excitation in corresponding phase.

The transient part is clearly visible within the first 20µs. A sampling rate of 120 MS/s is used for the measurements analyzed in this paper. However, a reduction of the sample frequency is possible. A resolution of 15MS/s is recommended to reach acceptable accuracy. With focus on a practical implementation and the usage of a DSP with lower sampling rate (few MS/s) the authors recommend the improvement of signal resolution with special sampling techniques. Generally the DSP attempts to gather all the samples for a waveform with one trigger event. With the principle of equivalent-time sampling and the generation of repetitive current responses the DSP gathers the necessary number of samples across several triggers, which are shifted in time. First investigations approve the applicability and show results with sufficient accuracy.

The length of the transient ringing depends on different factors, e.g. the inverter switching time, supply voltage level, cabling between inverter and machine and the machine itself.

The drive system consists of three main components, the inverter, cabling and the machine depicted in Fig. 2, illustrating if a switching transition in phase L1 from lower short circuit to an active state occurs. These three components form a complex system. The characteristic of the fast voltage step depends on the inverter technology used. A capacitive coupling of inverter to ground also exists, denoted with $C_{Inv\text{-}Gnd}$ influencing the whole system behavior. The cabling can be represented with the characteristic impedance, the resistances R_{cable}' and inductances L_{cable}' per unit length, and the capacitances cable to ground $C_{Ca\text{-}Gnd}$ and cable to cable $C_{Ca\text{-}Ca}$, as indicated. And finally the machine, with the parasitic elements phase to phase $C_{Ph\text{-}Ph}$, phase to ground $C_{Ph\text{-}Gnd}$ and turn to turn $C_{t\text{-}t}$. All these elements influence the electrical high frequency behavior of the machine at voltage step excitation and thus the transient current response. Because the insulation degradation is always linked with a capacitive change, the externally placed fault capacitor C_{Fault} is also depicted in the figure. This emulates a change in the capacitive characteristic of the machine, and hence a deviation to the healthy machine is observable in the transient part of the current sensor response. Temperature and humidity sensors (rectangle, diamond) are placed on different locations at the winding respectively on the iron of the machine.

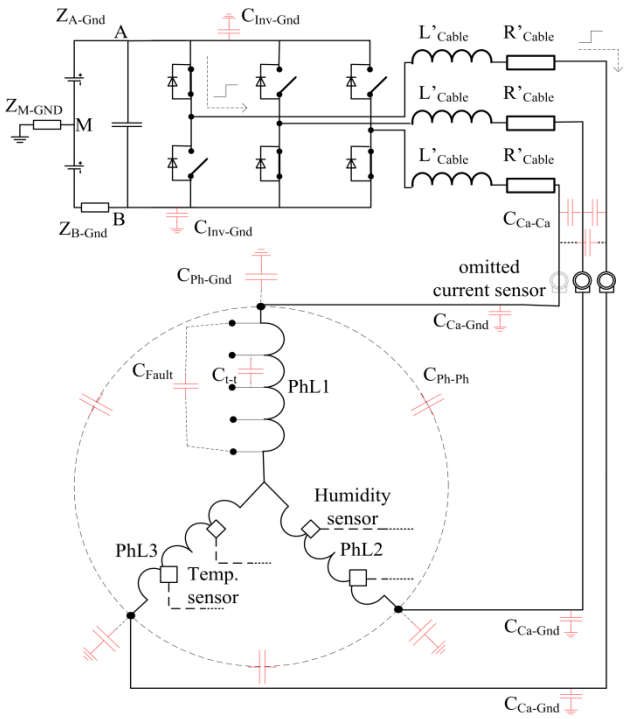

Fig. 2 Schematic view of the complex system inverter, cabling and machine with parasitic capacitances.

A. *Measurements and fundamentals of the method*

The measurements are conducted on a test stand with a special type 1.4 MW induction machine with tappings. With this setup, insulation degradation is emulated with capacitances placed parallel the winding, forcing a change of the impedance characteristic of the machine. A high number of tappings in phase L1 and L2 are available to facilitate the investigations of different insulation degradation characteristics. The change in the impedance characteristic affects the current response after a step excitation is applied. This deviation is compared with a measurement of the same machine in a healthy (without additional capacitance) machine state. In Fig. 3, a comparison of the current

response in case of the healthy machine (blue) and the same machine with emulated insulation degradation with a capacitor of 15nF parallel the whole phase L1 is shown.

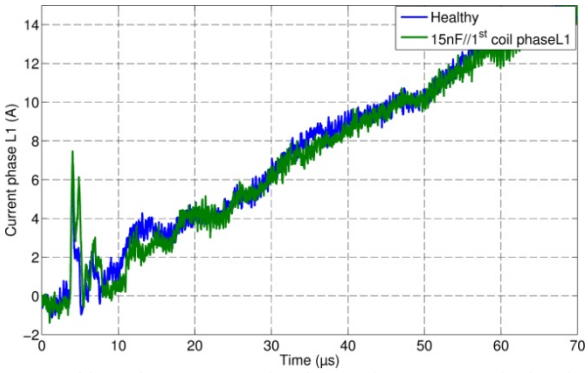

Fig. 3 Resulting phase current signal to voltage step excitation in the corresponding phase.

The deviation between both traces is clearly observable. The measured current responses of a phase after step excitation with different machine conditions, regarding the insulation state, show characteristic deviations suitable for an insulation state evaluation. Before the measured current signals are subsequently analyzed, further signal preprocessing steps are necessary. To avoid deviation of the switching transition through jitter of the inverter system, a trigger detection algorithm is used to determine the accurate instant of the rising edge of the current. Furthermore, the mean signal slope is calculated to prevent influences of inherent machine asymmetries. Finally the mean of the signal is subtracted to remove the DC-component in the spectrum. Fig. 4 depicts an example of the approach and the result of the time signal after pre-processing is done.

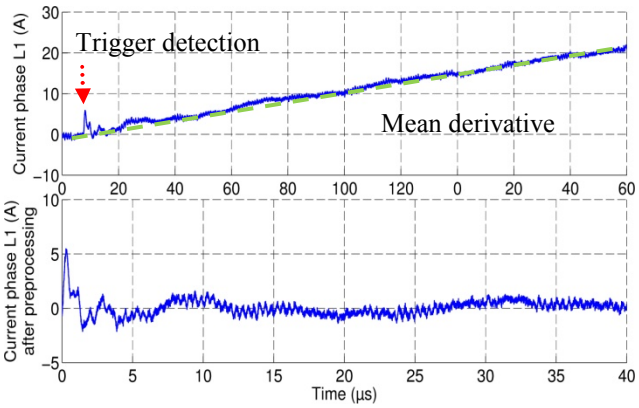

Fig. 4 Procedure of the signal pre-processing and resulting signal

After preprocessing, the signals are analyzed in the frequency domain using the Fast Fourier Transformation FFT. To enable statistical analyses a high number of single measurements (at least 40) are carried out to represent one machine state. The mean of the resulting spectra for the healthy machine condition (blue trace), the emulated insulation degradation with 15nF placed in parallel to the 1st coil of phase L1 (green trace) and the square deviation of both traces (dashed red) are all shown in Fig. 5.

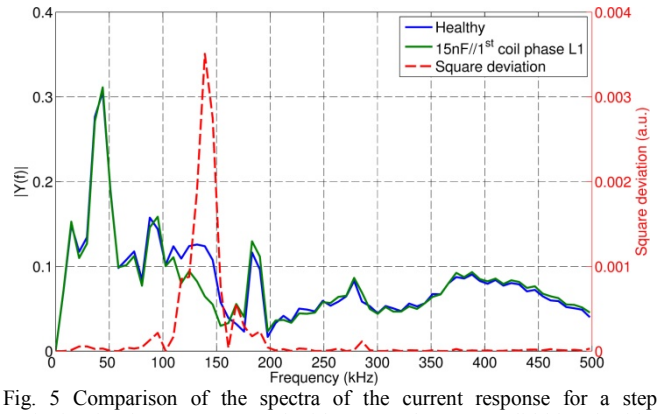

Fig. 5 Comparison of the spectra of the current response for a step excitation in phase L1 measured with sensor phase L1; solid blue: healthy machine, solid green: emulated insulation degradation with 15nF parallel whole phase L1, dashed red: square deviation.

The blue trace serves as a reference and represents the first measurement of the new machine after initial operation of the drive system. A change of the green trace (representing measurements taken during operation of the drive) with respect to the reference can be interpreted as insulation degradation. The observed frequency range is selected from 50 kHz to 500 kHz. Below 50 kHz the magnitude values of the analyzed spectra are occasionally subjected to higher fluctuations and inaccurateness in the mean derivative estimation that affect this low frequency range. As the frequency range of interest is outside the specification of the current sensors their signal accuracy is clearly reduced, however their transfer functions are still reproducible. As aforementioned the bandwidth of the current sensors is specified with 150kHz. Investigations with sensors of different manufacturer and lower (50kHz) respectively higher (300kHz) bandwidth specification deliver results with the same accuracy. At lower frequencies the sensor operates using the electronic components including the hall sensor. However, at higher frequencies the compensation winding with the flux concentrating core operates as a current transformer providing the output signal of the current sensor. The most noticeable change of the frequency spectrum due to the additional capacitor occurs in a very narrow range around 100 kHz to 200 kHz. The main deviation depends on the size and position of the capacitor, therefore the whole frequency range mentioned before is analyzed with an integration of all deviations.

B. Omitting one current sensor

Omitting one phase current sensor thus leads to a lack of information. The transient current reaction in the non-excited phases is very small and hardly influenced by a change of the phase capacitance, as depicted in Fig. 6. The excitation of phase L1 with 15nF parallel 1st coil phase L1 shows hardly visible deviations between the healthy machine (blue) and the degraded insulation machine state (green). Despite the phase with degraded insulation (L1) is directly excited, the current reaction deviation compared to the healthy machine state is hardly observable in the non-excited current reaction (L2).

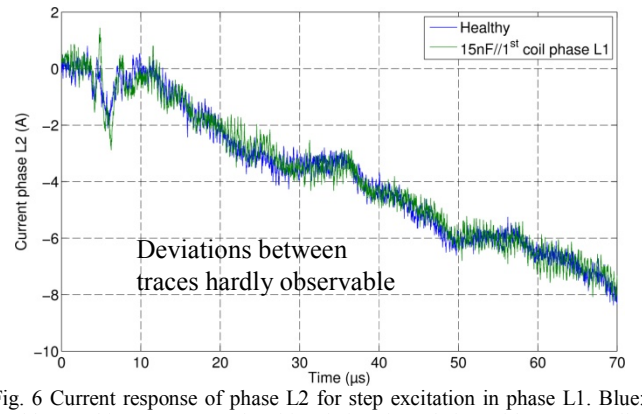

Fig. 6 Current response of phase L2 for step excitation in phase L1. Blue: healthy machine; green: emulated insulation degradation with 15nF parallel 1st coil phase L1.

This indicates that deviations in the spectra, as characterized in Fig. 5, are hardly detectable if the corresponding current sensor is omitted although a capacitance of 15nF is used for the insulation degradation emulation corresponding to a clear deterioration. As a consequence, the omission of one sensor implicates that the information about the insulation state in the corresponding phase is almost lost.

A simple substitution of the missing transient current reaction by using the sum of the two other currents is not helpful and is only valid for low frequencies. The sum of the transient current signal part is different from zero through e.g. the appearance of displacement currents. Using this composite signal does not deliver satisfactory results. Furthermore, the sensibility to detect a change on the base of excitation in the sensor-less phase while measuring the response in another phase is not sufficient for smaller deviations.

To overcome these limitations, a new excitation and signal processing method has been developed. Fig. 7 depicts the schema of this new procedure that delivers an insulation health state indicator for the phase without a sensor. The new indicator is based on comparison of different pulse excitations and current reactions of the non-excited phases. It uses the principle of the symmetric machine at a healthy machine condition. The new indicator serves as an enhancement to facilitate the omission of one current sensor and to observe the insulation condition of the non-measured phase.

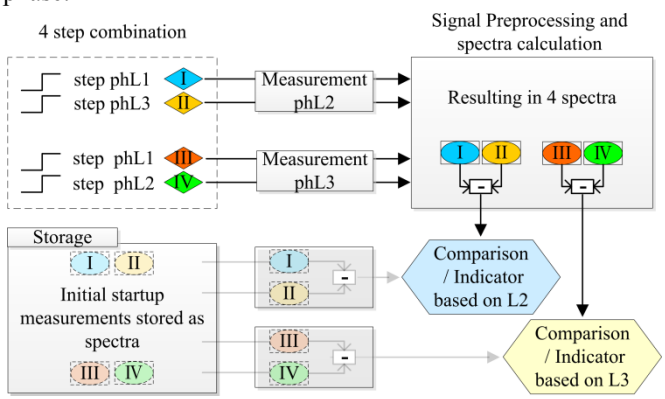

Fig. 7 Scheme of the new excitation and signal processing sequence.

The new method uses four step excitations, denoted I, II, and III, IV, in the block in Fig. 7 denoted with "*4 step combination*". For the following explanation it is assumed, that no sensor in phase L1 is available. At first the measurements are done only with sensor phase L2 while two equivalent voltage steps (I and II), one in phase L1 and one in phase L3 are established. Comparing the two measurements, especially the spectra ("*Signal preprocessing and spectra calculation*" block of Fig. 7) gives an evidence for a possible asymmetry of phases L1 and L3. The procedure described above is repeated for excitation in phase L1 and L2 (voltage steps III and IV) and measurement in phase L3. Thus, the measurement of the current reaction is always taken in the non-excited phase and the resulting spectra are used for the evaluation.

The comparison of the results of voltage steps I and II respectively III and IV is done with the simple difference of the current spectra. In case of an ideally symmetric machine, the spectra should be equal and the difference results to zero. In the next step the initial startup measurement from storage (see lower left part of Fig. 7) and the results of the difference spectra are compared to the results of an actual measurement. If insulation degradation occurs, a deviation in all calculated spectra is observable and the comparison to the stored data will indicate the severity. The following Fig. 8 a) and b) shows the results of two measurements of the same machine for the initial operation measurement (reference, healthy insulation state) from the storage and a measurement with existing insulation degradation emulated with 15nF parallel 1st coil phase L1. In subfigure a) the blue trace represents the difference of the current spectra resulting from excitation steps I and II for the healthy machine condition at initial operation. The green trace gives the results in case of emulated insulation degradation with 15nF parallel phase L1. The shaded red area emphasizes the deviation between the two machine conditions. In subfigure b) the difference of the spectra for excitation steps III and IV for the healthy machine condition at initial operation (blue trace) and in case of emulated insulation degradation with 15nF parallel phase L1 (green trace) are shown. Again the shaded red area emphasizes the deviation between the two traces.

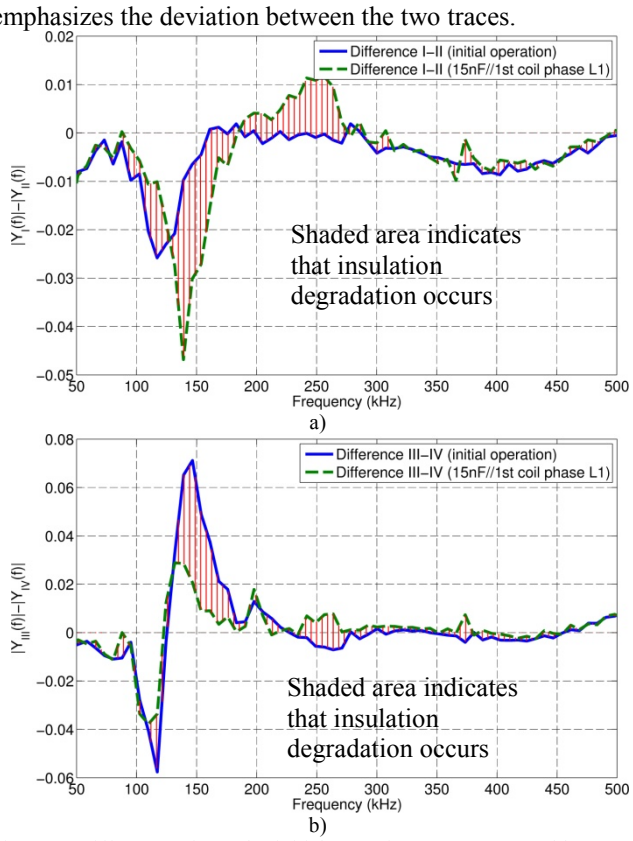

Fig. 8 a) Difference of I-II the initial operation measurement (blue trace) and in case of degraded insulation (green trace) measured with sensor phase L2. b) Difference of III-IV the initial operation measurement (blue trace) and in case of degraded insulation (green trace) measured with sensor phase L3.

In a next step an indicator is introduced to assess the severity of the insulation degradation. The Root Mean Square Deviation (RMSD) calculated from the difference of the spectra of reference measurements and further measurements has been found as a good indicator to express the severity of the insulation change and the insulation state is expressed with this indicator, denoted ISI_2S (2 Sensors) in the following. With equation (1) the RMSD between two traces is calculated.

$$ISI\_2S_p = RMSD_p(x_1, x_2) = \sqrt{\frac{\sum_{i=1}^{n}\left(Y_{ref\_sum,p}(f_i) - \left|Y_{con,p}(f_i)\right|\right)^2}{n}} \quad (1)$$

$$Y_{ref\_sum,p} = \frac{\sum_{i=1}^{l}\left(\sum_{k=1}^{m}\frac{Y_{ref,p,k}}{m}\right)_i}{l};\ Y_{con,p} = \frac{\sum_{k=1}^{m} Y_{con,p,k}}{m}; \quad (2)$$

The index p identifies the investigated phase. The variables $Y_{ref\_sum,p}$ and $Y_{con,p}$ represent the mean of the amplitude spectrum of at least one reference and of one later condition measurement respectively. The variable n depends on the time window length. To increase the accuracy, quantity of spectra for the mean is set to at least 33 (Index m), equation (2). The principle of detecting changes in the current response through repetitive measure procedures assumes same boundary conditions for every measurement. The reference signals are confirmed through several test measurements at a healthy machine state. Only after the reference signal can be verified and confirmed the examination of changes can be done. It is recommended to improve the signal processing accuracy with a high number (l) of reference measurements (each containing at least 33 spectra) taken at different time instants and to use the mean as base value $Y_{ref\_sum,p}$ (Index l) for the comparison. With the correctly obtained reference and further measurements the comparison and observation of changes in the current response is possible.

C. *Experimental results*

Different scenarios are tested to verify the proposed method. A small impedance change is stimulated by a capacitance of 3nF, placed parallel to the first single coil of the winding. To enable an easy interpretation of the insulation state indicator values, they can be scaled to the initial measurements taken at the initial operation of the machine set. An indicator of "1" is then equal to a healthy machine state and higher values indicate insulation degradation. The scaling of the indicator is used in Fig. 9, Fig. 11, and Fig. 13 on the vertical axes. Fig. 9 depicts the comparison of the results between the normal ISI value (if a sensor is available in the corresponding phase) and the new method (without direct phase current measurement, ISI_2S). The insulation degradation was realized in phase L1 by placing capacitors parallel the whole phase winding (left bars of group A and B) or parallel a single coil (right bars of group A and B). The green colored bar group (denoted "group A") shows the resulting indicator for different scenarios if a sensor is available in phase L1 (normal ISI). The blue colored bar group (denoted "group B") shows the results if the sensor phase L1 is omitted and the indicators are calculated based on the data measured with the non-excited phases (average of both ISI_2S indicators). Both bar groups show a monotonic increasing tendency for increasing capacitance values placed parallel the whole phase winding or a single coil only. As can be seen, there is hardly any loss of sensitivity when omitting the sensor in L1 in all tested cases.

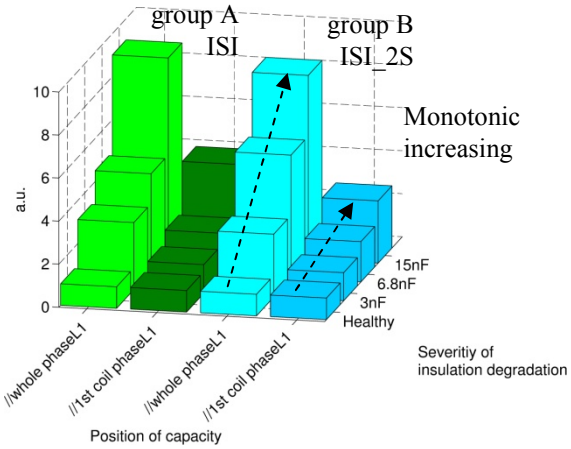

Fig. 9 Comparison of ISI and ISI_2S values for different fault scenarios.

D. *Influence of moisture*

Moisture is one factor of ambient stress that results from the environmental conditions and that can, in combination with other stress, lead to failure. It originates through condensation on the winding due to a high gradient between ambient and motor temperature or simply through high humidity of the surrounding air.

To analyze the influence of moisture on the proposed method and the tested machine a special experimental setup was established. The machine was placed in a box, sealed with a water resistant plastic sheet on the inside of the wall sections of the box and moisture was generated. In Fig. 10 the difference of the spectra I and II (according to Fig. 8 a) in case of a healthy dry machine (solid blue) and in case of a healthy moist machine state (solid green) are shown. Additionally the difference of the spectra I and II in case of emulated insulation degradation through a capacitor of 6.8nF parallel whole phase L1 are compared, for a dry machine state (dashed blue) and a moist machine state (dashed green). It is clearly visible that the change in case of the emulated insulation degradation, in relation to the healthy data, in both cases dry and moist machine is approximately in the same dimension. A difference is hardly visible. Considering a new insulation like the one of the test machine, the influence of moisture on the insulation state indicator is thus negligible.

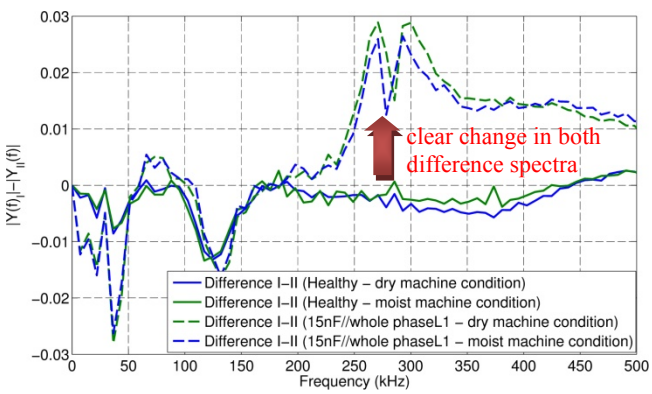

Fig. 10 Difference of spectra I and II in case of a dry machine state (solid blue) and in case of a moist machine state (solid green). Same measurement again with emulated insulation degradation through 6.8nF parallel whole phase L1 in case of a dry machine state (dashed blue) and in case of a moist machine state (dashed green).

In Fig. 11 a comparison of the calculated indicator values for different degradation scenarios with a dry and moist machine

condition is shown. The monotonic increasing tendency is visible for the dry and moist machine and the influence of moisture can be neglected.

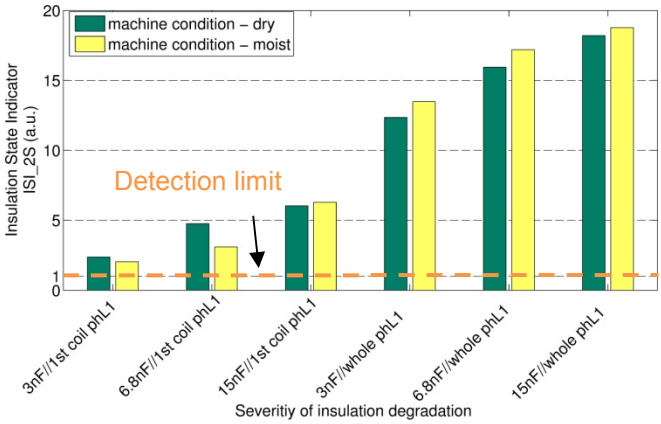

Fig. 11 Calculated indicator values for different scenarios in case of a dry and moist machine.

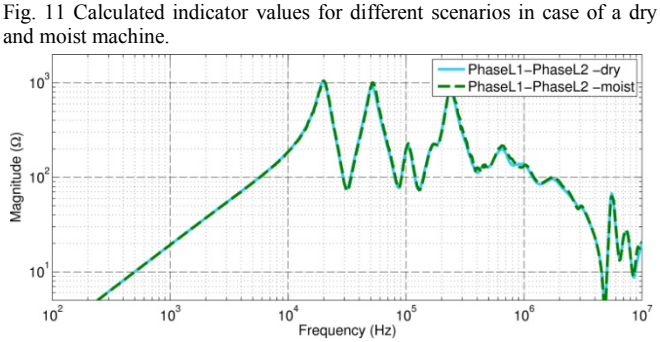

Fig. 12 Frequency characteristic measurement of line to line L1-L2

To approve the results, the frequency characteristic of line to line L1-L2 arrangement was analyzed with a frequency response analyzer (FRA - Bode 100). In Fig. 12 the frequency sweep mode from 100 Hz to 10 MHz shows no deviation between the dry measurement (solid blue) and moist machine state (dashed green).

Regarding alternative offline insulation monitoring methods e.g. PI – polarization index (the ratio of two measured insulation resistance values after different time periods) or dissipation factor tan δ measurements, the effect of moisture is well known and analyzed in theory. For example if measuring the insulation resistance it is clear that the leakage current is extremely influenced by the amount of conductive material which is dependent on moisture or contamination on the surface of the insulation. However, the effect is more pronounced if the surface is also contaminated, or if cracks in the insulation are present. The proposed monitoring method focuses on the complete relations of the parasitic capacitances within the system and the results are independent on surface contamination. The changes of the insulation states are only emulated and in the investigated cases no influence of moisture is observable.

E. Influence of temperature

The temperature of a drive system depends on many factors, e.g. cooling system, ambient temperature or load. Stator winding insulation materials may be heated beyond their temperature limits by excessive heat from motor losses. For that reason the winding insulation materials may be accelerated and irreversible deteriorated, resulting in reduced motor life time or even total motor failure [12]. To prevent such excessive thermal stress and ensure continuous and reliable motor operation, temperature limits for stator windings of machines based on their insulation classes were established [13]. Typically insulation class H is used in drive systems with a power around 1.4 MW. The maximum operation temperature of class H insulation allowed during operation is 180°K above ambient temperature, specified in the European standard 60349. Thus, the influence of the temperature on the monitoring method respectively the calculated indicators are tested. The heat up process of the machine was done by applying a slowly rotating current space phasor. Thereby, heating of the machine is done dominantly with the power loss of the winding system. To accelerate the process the machine was placed in a box encased with thermal insulation. The maximum temperature of 130 °C of the special tapping connections was observed not to be exceeded. Because of the high time constant of the iron and the slow cooling down process, the temperature denoted in the following analyses is linked with the averaged iron temperature of three different measurement points.

The measurements started after an averaged iron temperature of 130°C was reached and are repeated within the cooling procedure every 10°C until ambient temperature. In Fig. 13 the comparison of different scenarios at two temperature levels, 40°C and 130°C, are shown. Different capacitances 3nF, 6.8nF and 15nF are placed parallel the first coil, representing smaller insulation degradations, and parallel the whole phase L1 representing a higher severity. The blue bars denoted with "ISI_2S@40°C" show the average of both indicators if all measurements are carried out at the same temperature level of 40°C. On the contrary the red bars denoted with "ISI_2S@130°C" represent the averaged indicators for a series of measurement within a temperature level of 130°C.

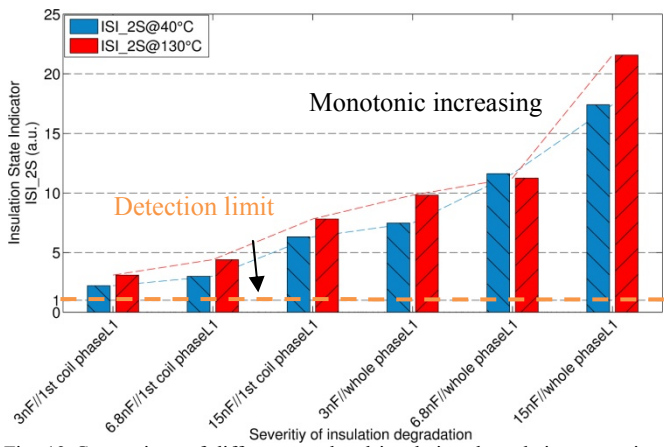

Fig. 13 Comparison of different emulated insulation degradation scenarios at a temperature level of 40°C (blue) and 130°C (red).

A tolerance of ΔT=±10°C is accepted for the temperature specification. The results at both temperature levels show the same tendency with increasing indicator values at higher severity of emulated degradation. All tested insulation degradation scenarios are clearly detectable. To increase detection sensitivity, it is recommended that the measurements for the estimation of the insulation state are always compared with reference values obtained at a similar temperature level. In industrial drives the temperature of the machine is varying in a wide range based on external influences. With temperature sensor available, the temperature has to be stored together with the measurement data. For a comparison and calculation of the fault indicator, a deviation of approximately ±10°C of both measurements is recommended. Drive systems without temperature sensor available should then be tested during maintenance phase or if the system is out of operation for a defined time period to ensure similar temperatures.

III. CONCLUSION

A method to detect insulation degradation of three phase ac machines based on the information of two current sensors only has been presented. The proposed technique is based on evaluating the current transients resulting from step excitation. These transients are mainly influenced by the drive's parasitic capacitive components and insulation degradation is always linked with a change of this capacitance that is considered the dominant parameter for insulation health state evaluation. A new fault indicator was derived and its sensitivity to capacitive changes verified. A combination of different step excitations and measurement sequences enables the monitoring with only two current sensors. The time signals of the current responses are transferred into frequency domain and based on the deviation, between reference measurement at initial operation of the drive and later in-service measurements; information about the insulation condition is obtained. Measurements performed on a 1.4MW induction machine with different machine conditions verify the applicability of the proposed method. The emulated insulation degradation cases tested are detectable and show a monotonic increasing tendency for increasing winding capacitance values. There is no significant deterioration of sensitivity if one single phase current sensor is omitted. Additionally the influence of moisture is negligible. Measurements at different temperature levels show that influences on the proposed method exist and it is recommended to determine the deviation of measurements taken at a smilar temperature level. With a temperature sensor available in most drive systems the fault indicator can be calculated with no loss of sensitivity. It has to be stressed that the presented two-sensor-method is an extension to a method already published ([11],AT511807 B1).

IV. ACKNOWLEDGMENT

The work to this investigation was supported and funded by the Austrian Research Promotion Agency (FFG) under project number 838478.

The authors want to thank Bombardier Transportation Switzerland (GSC/PPC-CoE2, head M. Jörg), and Bombardier Transportation Austria GmbH (GSC/PPC - Drives; electrical calculation group) for the generous support. Further the authors want to thank Product Development GSC/PPC Drives (M.Bazant) for PDev funding and feedback as well as Mr. Baro (GSC/PPC-Drives Global Engineering Head) for the great support. Thanks also goes to LEM -Company (especially Mr. W. Teppan) and National Instruments Austria (Mr. G.Stefan) for the cooperation and the generous support.

V. REFERENCES

[1] IEEE Committee Report; "Report of large motor reliability survey of industrial and commercial installation, Part I," I*EEE Transactions on Industry Applications*, vol.21, no.4, pp.853–864, 1985

[2] IEEE Committee Report; "Report of large motor reliability survey of industrial and commercial installation, Part II," *IEEE Transactions on Industry Applications,* vol.21, no.4, pp.865–872, 1985

[3] Nandi, S.; Toliyat, H.A.; Xiaodong Li; "Condition monitoring and fault diagnosis of electrical motors-a review," *IEEE Transactions on Energy Conversion,* vol.20, no.4, pp.719-729, 2005

[4] Bellini, A.; Filippetti, F.; Tassoni, C.; Capolino, G.-A.; "Advances in Diagnostic Techniques for Induction Machines," *IEEE Transactions on Industrial Electronics*, vol.55, no.12, pp.4109-4126, 2008

[5] G. C. Stone, E. E. Boulter, I. Culbert, and H. Dhirani, "Electrical Insulation for Rotating Machines". *IEEE Press*, 2004

[6] Farahani, M.; Borsi, H.; Gockenbach, E.; "Study of capacitance and dissipation factor tip-up to evaluate the condition of insulating systems for high voltage rotating machines," *Electrical Engineering*, vol.89, no.4, pp.263-270, 2007

[7] Farahani, M.; Gockenbach, E.; Borsi, H.; Schaefer, K.; Kaufhold, M.; "Behavior of machine insulation systems subjected to accelerated thermal aging test," *IEEE Transactions on Dielectrics and Electrical Insulation*, vol.17, no.5, pp.1364-1372, 2010

[8] Perisse, F.; Werynski, P.; Roger, D., "A New Method for AC Machine Turn Insulation Diagnostic Based on High Frequency Resonances," *Dielectrics and Electrical Insulation, IEEE Transactions on* , vol.14, no.5, pp.1308,1315, October 2007

[9] Kim, H.D.; Yang, J; Cho, J.; Lee, S.B.; Yoo, J.-Y.; "An Advanced Stator Winding Insulation Quality Assessment Technique for Inverter-Fed Machines," *IEEE Trans. on Ind. Appl.*, vol.44, no.2, pp.555-564, (Mar./Apr. 2008)

[10] Peroutka, Z., "Requirements for insulation system of motors fed by modern voltage source converters," *Power Electronics Specialists Conference, 2004. PESC 04. 2004 IEEE 35th Annual* , vol.6, no., pp.4383,4389 Vol.6, 20-25 June 2004

[11] Nussbaumer, P.; Santin, C.; Wolbank, T.M.; "Analysis of current reaction on inverter-switching to detect changes in electrical machine's high-frequency behavior," *38th Annual Conference on IEEE Industrial Electronics Society, IECON*, pp.1678-1683, 2012

[12] A. H. Bonnett and G. C. Soukup, "Cause and analysis of stator and rotor failures in three-phase squirrel-cage induction motors," *IEEE Trans. Ind. Appl*. vol. 28, pp. 921-937, 1992

[13] Information Guide for General Purpose Industrial AC Small and Medium Squirrel-Cage Induction Motor Standards, *NEMA Standard MG1-2003*, Aug. 2003

VI. BIOGRAPHIES

Clemens Zoeller received the B.Sc. degree in Electrical Engineering and the M.Sc. degree in Power Engineering from Vienna University of Technology, Vienna, Austria in 2011 and 2013, respectively. He is currently Project Assistant at the Department of Energy Systems and Electrical Drives, Vienna University of Technology and working towards his PhD degree. His special fields of interest are fault detection and condition monitoring of inverter fed machines.

Markus A. Vogelsberger received the the Dipl.-Ing./M.S. (with honor) and Dr.Techn/Ph.D. (with honor) degrees in Electrical Engineering from Vienna University of Technology, Vienna, Austria, in 2004 and 2009, respectively. He has been a Scientific Research Assistant in the Institute of Electrical Drives and Machines, Vienna University of Technology, where he has been engaged in several industrial and scientific R&D projects in the field of sensorless control, drives systems and power electronics / drive converter. He joint Georgia Institute of Technology University, Atlanta/USA for study and international research activities for several months in 2006 and 2008, respectively.

In 2011, he joined Bombardier Transportation, Vienna, Austria, as a Development Engineer and R&D Project lead in the PPC-Drives Department. His field of interest includes design of traction motors, control and simulation of electrical drives, power electronics as well as high innovative multidisciplinary R&D-Projects. In particular, currently his focus as R&D-Project Lead for drives is on the research/development and managing of fault detection and condition monitoring strategies for AC traction drives (high innovative OIM-project) and on the interdisciplinary R&D-Project - thermo efficient traction motor design.

Peter Nussbaumer received the MSc degree in Power Engineering and the PhD. degree in Electrical Engineering from Vienna University of Technology, Vienna, Austria in 2009 and 2013, respectively. He had been a Project Assistant at the Institute of Energy Systems and Electrical Drives, Vienna University of Technology, where he had been engaged in several industrial and scientific projects with focus on electrical drives and electric mobility. His special fields of interest are fault detection, condition monitoring and sensorless control of inverter-fed AC machines. In 2014 he joined Bombardier Transportation, Zurich, Switzerland in the PPC Department as a control engineer for motor converter control of High Power Propulsion systems.

Thomas M. Wolbank received the doctoral degree and the Associate Prof. degree from Vienna University of Technology, Vienna, Austria, in 1996 and 2004, respectively. Currently, he is with the Department of Energy Systems and Electrical Drives, Vienna University of Technology, Vienna, Austria. He has coauthored more than 100 papers in refereed journals and international conferences. His research interests include saliency based sensorless control of ac drives, dynamic properties and condition monitoring of inverter-fed machines, transient electrical behavior of ac machines, and motor drives and their components and controlling them by the use of intelligent control algorithms.