Secure, decentralised Architecture for Power System Operation

Verlässliche, dezentrale Architektur zum Betrieb des elektrischen Energiesystems

Albana Ilo
University of Technology of Vienna
Institute for Energy Systems and Electrical Drives

SMART GRIDS WEEK I VIENNA 2015

Smart Grid challenges

- Load – generation balance in high voltage grid
- Voltage violations in distribution grid

Centralised architecture

Decentralised architecture

Paradigm

VPP

Microgrids

ICT challenge
Big data exchange

extremely ramified and complex central coordination

Smart Grid challenges

"**Although a detailed definition of microgrids is still under discussion in technical forums**, a microgrid can be described as a cluster of loads, Distributed Generation (DG) units and ESSs operated in coordination to reliably supply electricity, connected to the host power system at the distribution level at a single point of connection, the Point of Common Coupling (PCC).

The adoption of **microgrids** as the paradigm for the massive integration of distributed generation **will allow technical problems to be solved in a decentralized fashion**, reducing the need for an extremely ramified and complex central coordination and **facilitating the realization of the Smart Grid.**"

Source: IEEE-PES Task Force on Microgrid Control, *"Trends in Microgrid Control"*, IEEE Transactions on smart grid, Vol. 5, No. 4, July 2014

Energy Supply Chain Net – Overall grid model

Vertical axis

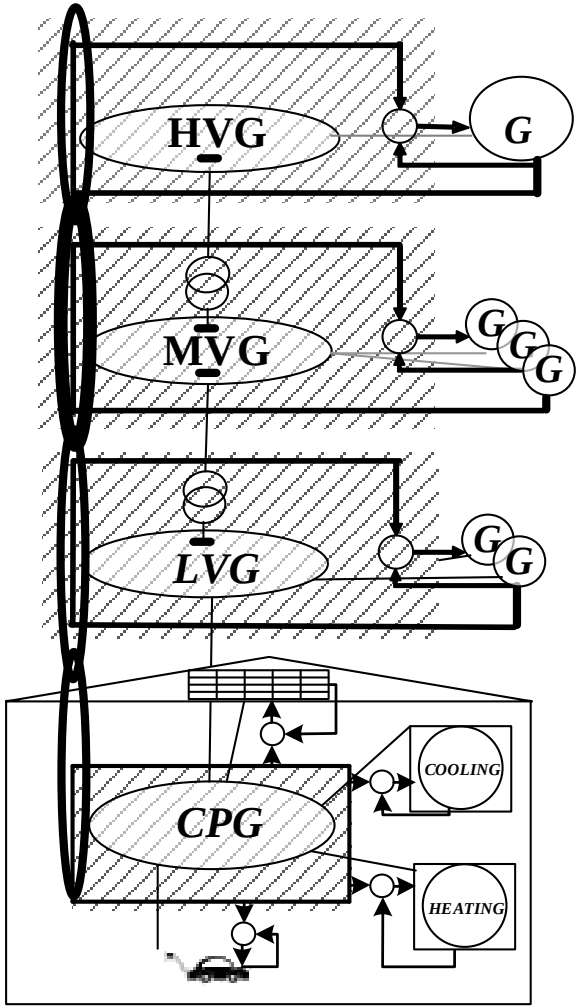

Per definition the "**Energy Supply Chain Net**" is a set of automated power grids, intended for "Chain Links" or "***Links***", which fit into one an - other to establish a flexible and reliable electrical connection. Each individual "***Link***" or a "***Link***"-bundle operates independently and have contractual arrangements with other relevant boundary "***Links***", "***Link***"-bundles, and suppliers which inject directly to their own grid. Each "***Link***" or "***Link***"-bundle is communicatively coupled with the other relevant "***Links***" or "***Link***"-bundle's via the usual communication instruments

Source: *"The Energy Supply Chain Net", Energy and Power Engineering, Volume 5 (5), July 2013.*

Power system overview based on the “Energy Supply Chain Net” model: horizontal und vertical axis

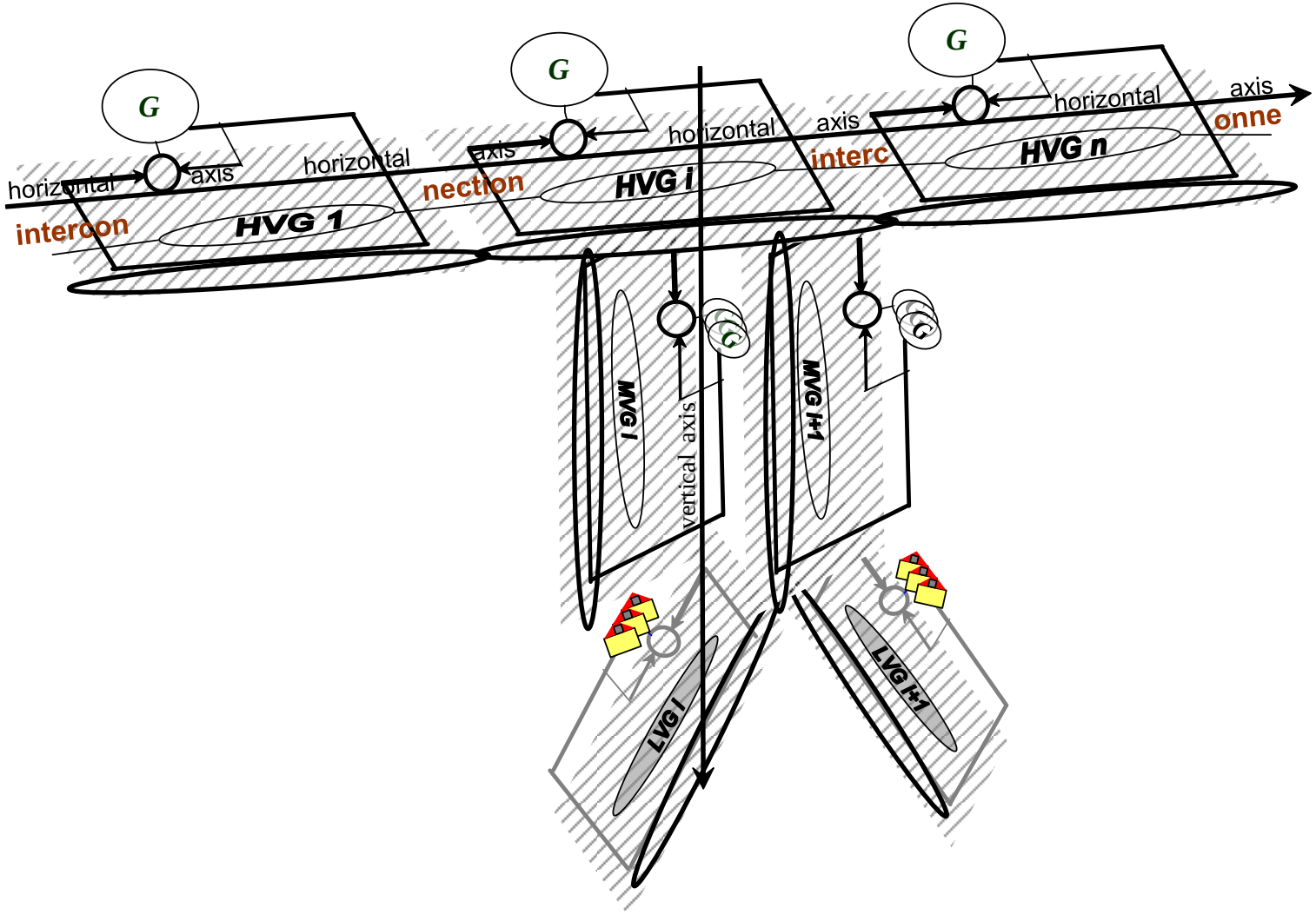

***Source**: “The Energy Supply Chain Net”, Energy and Power Engineering, Volume 5 (5), July 2013.*

Major architecture components:
the Link

1. The ***Link*** is defined as a composition of a grid part, called Link_Grid, with the corresponding Secondary-Control and the Link_Interfaces.

- The ***Link_Grid*** refers to electrical equipment like lines/cables, transformers and reactive power devices, which are connected directly to each other by forming an electrical unity.

- The ***Link_Grid size*** is variable and is defined from the area, where the Link_Secondary-Control is set up.

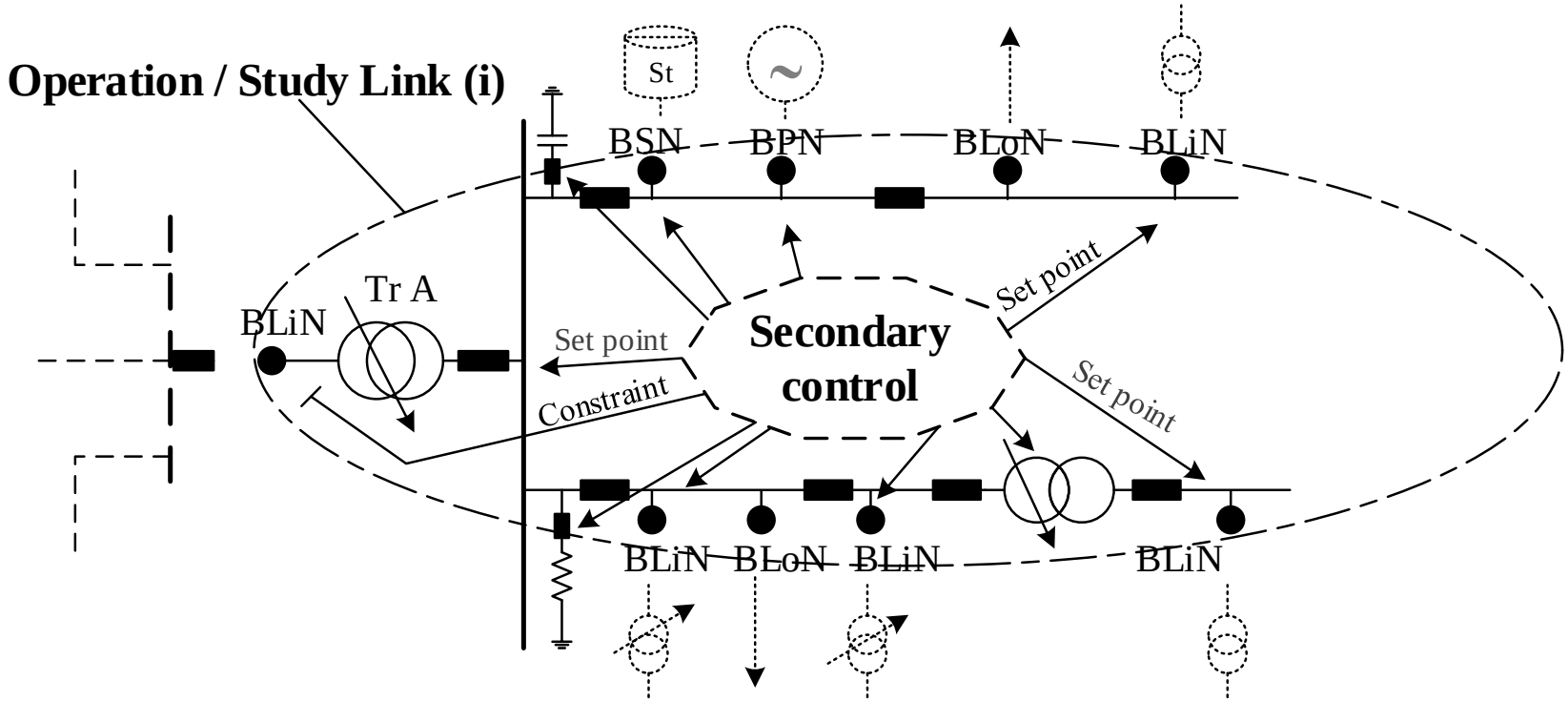

Source: *"Secure Decentralized Architecture for Smart Grid Operation", accepted to be published in Electric Power Systems Research - Journal - Elsevier*

Major architecture components:
the Producer_ and Storage_Complex

2. The ***Producer_Complex*** is defined as a composition of an electricity production facility be a generator, photovoltaic, etc., its Primary-Control and the Producer_Interface

3. The ***Storage_Complex*** is defined as a composition of a storage facility be the generator of a pump power plant, batteries, etc., its Primary-Control and the Storage_Interface

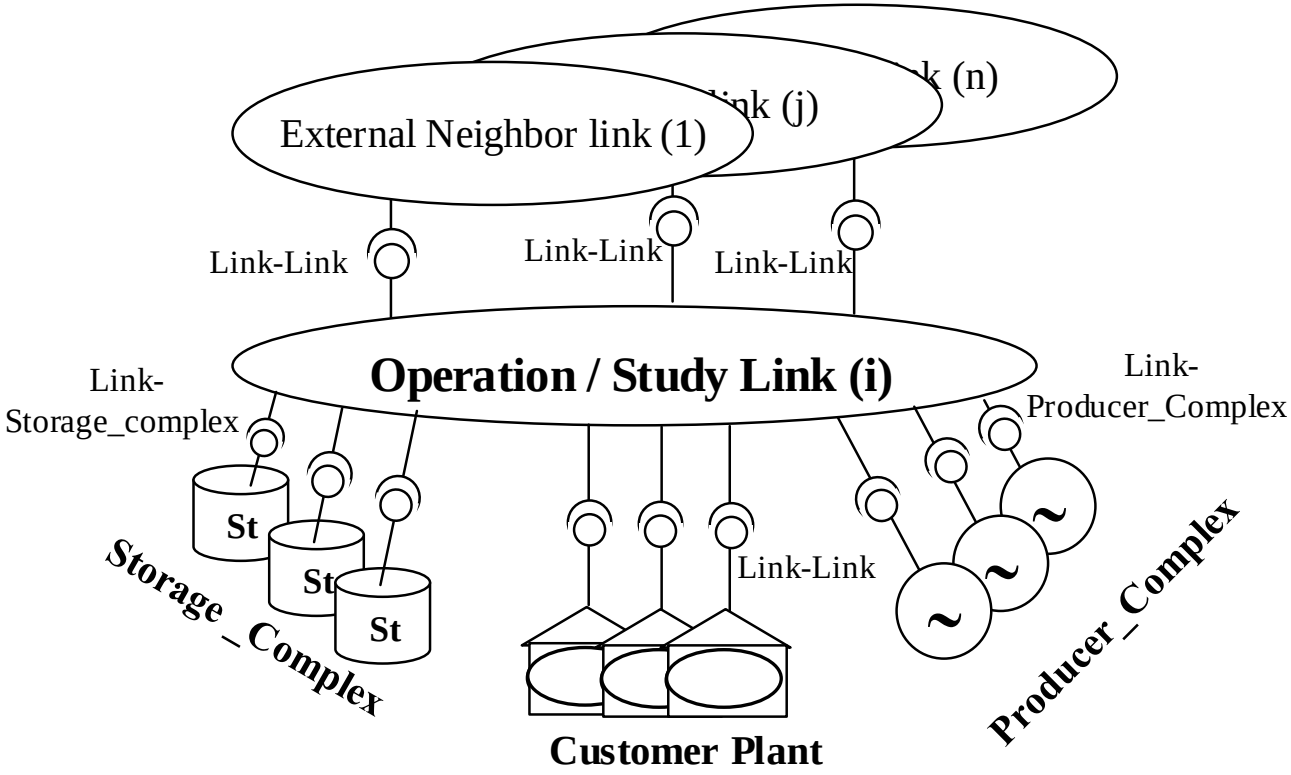

Source: *"Secure Decentralized Architecture for Smart Grid Operation", accepted to be published in Electric Power Systems Research - Journal - Elsevier*

The distributed Link-based architecture is defined

***Source**: "Secure Decentralized Architecture for Smart Grid Operation", accepted to be published in Electric Power Systems Research - Journal - Elsevier*

Different Link types:

a) HV-Link; b) MV-Link; c) LV-Link and d) CP-Link

High voltage

Low voltage

Customer plant

Medium voltage

Customer plant

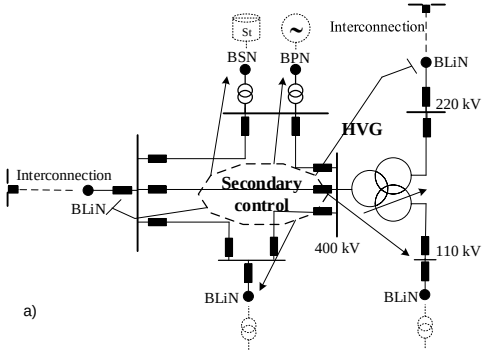

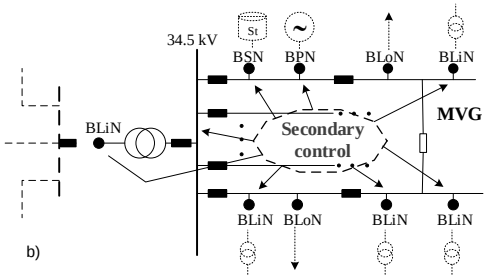

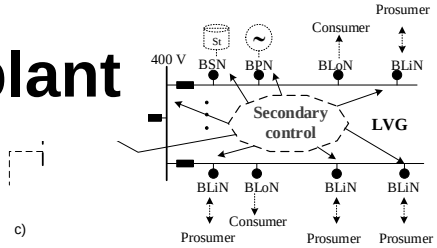

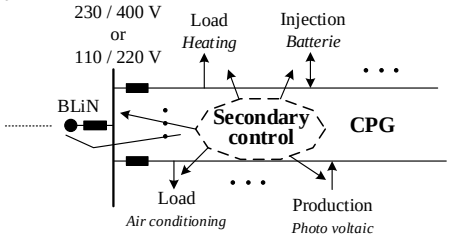

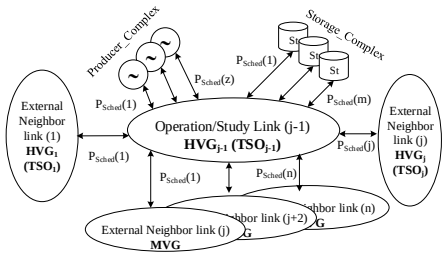

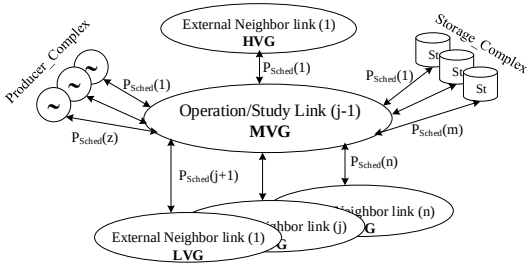

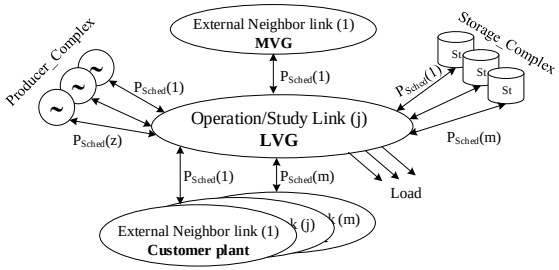

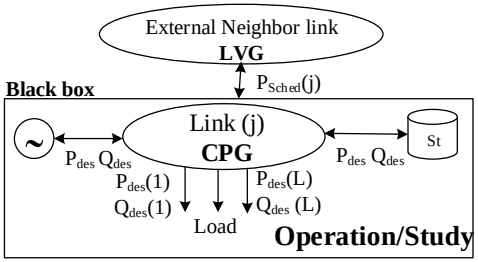

***Source**: "Secure Decentralized Architecture for Smart Grid Operation", accepted to be published in Electric Power Systems Research - Journal - Elsevier*

Power system operation processes

- Monitoring process

- Power system scenario analyses process

- Power system posturing processes (static security, angular stability, voltage stability)

- Load-generation balance process

- Operation optimization process

Interface definition

TABLE 1
ELECTRICAL ENTITIES FOR DIFFERENT LINK INTERFACE TYPES

	Electrical entities to be exchanged (*)	Link-Link	Link-Producer_Complex (**)	Link-Storage_Complex
Very fast	V_{meas}, δ_{meas}	√		
	P_{meas}, Q_{meas}	√	√	√
	P_{set_point}, Q_{set_point}	√	√	√
Fast	$P_{des} \pm \Delta P$, $Q_{des} \pm \Delta Q$ Delivered time Time interval	√	√	√
	$P_{des}^{nexthour} \pm \Delta P$ $Q_{des}^{nexthour} \pm \Delta Q$	√	√	√

* data related to the boundary node
** P and Q can have only one sign. Producers only inject power on the grid
*** static data should not be exchanged via interface

TABLE 2
ELECTRICAL ENTITIES FOR DIFFERENT LINK INTERFACE TYPES

	Electrical entities to be exchanged (*)	Link-Link	Link-Producer_Complex (**)	Link-Storage_Complex
	$P_{Schedule}^{dayahead} \pm \Delta P$ $Q_{Schedule}^{dayahead} \pm \Delta Q$	√	√	√
	Static and dynamic (lumped) load characteristic k_{PV}, k_{QV}, k_{Pf}, k_{Qf} …	√		√
	I_{equiv}, Z_{equiv}	√		
Slow	Dynamic equivalent Generator parameters like x_d, x'_d, …, T'_{d0}, …	√	(***)	
	Equivalent voltage regulator, static exciter parameters like K_A, T_A, …	√	(***)	
	Equivalent governors, turbine parameters like K_1, T_{G1}, …	√	(***)	
	Schedule for demand response capability	√		√
	Reserves schedule (secondary, tertiary)	√	√	√

* data related to the boundary node
** P and Q can have only one sign. Producers only inject power on the grid
*** static data should not be exchanged via interface

***Source**: "Secure Decentralized Architecture for Smart Grid Operation", accepted to be published in Electric Power Systems Research - Journal - Elsevier*

System operators for different Link types

Proposed structure

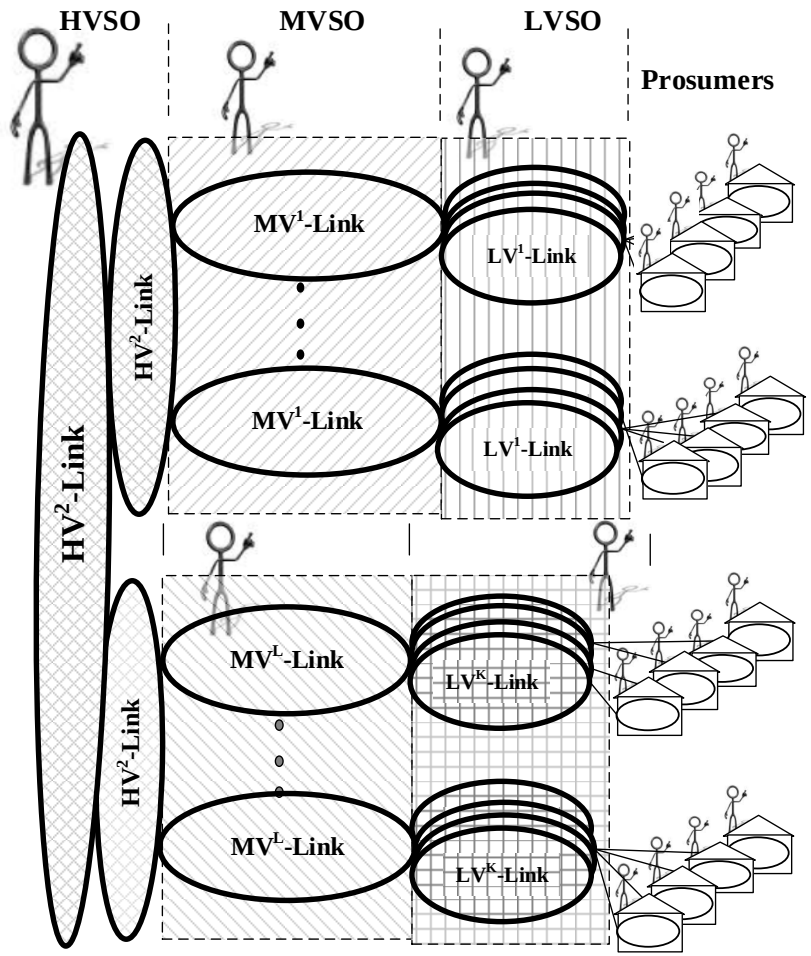

European type

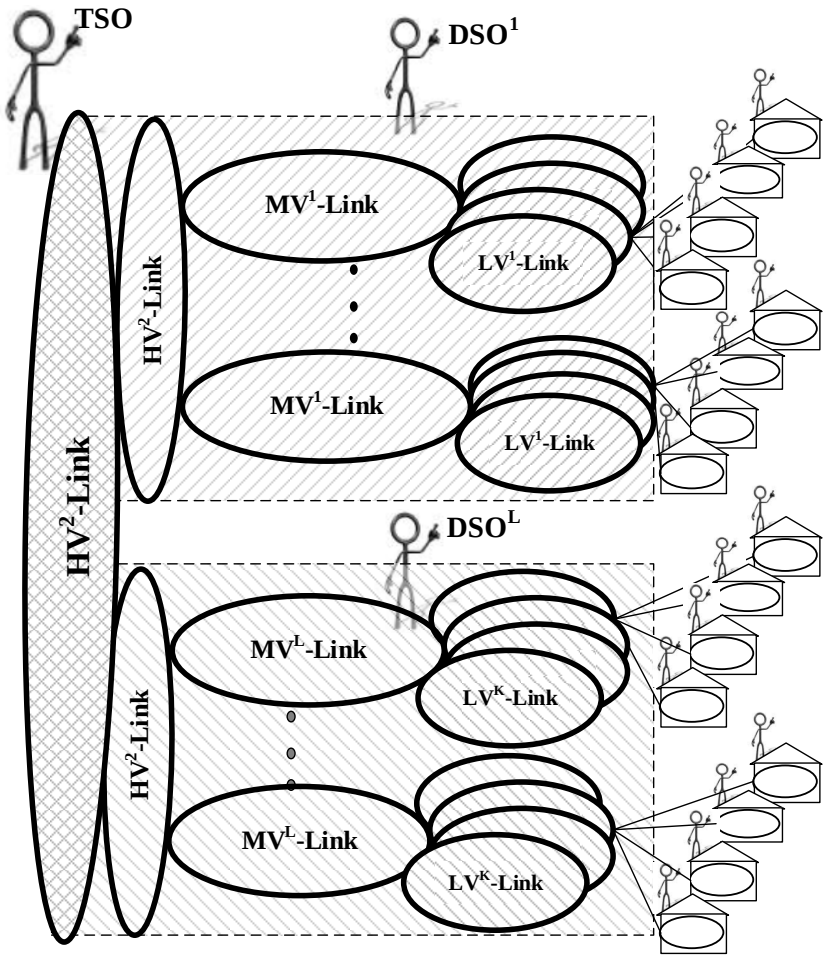

Source: *"Secure Decentralized Architecture for Smart Grid Operation", accepted to be published in Electric Power Systems Research - Journal - Elsevier*

System operators for different Link types

Each Link or Link-bundle operator be HVSO, MVSO, and LVSO including even the House-Lord (more exactly the HMU) should:

- balance the load and the injection in real-time, where the load represent the summation of the system native load and the scheduled exchange to other Links, while the injection represent the summation of the generation, injection from storage devices and the scheduled exchange to other Links.

- actively manage its Link or the Link-bundle

- monitor its Link-grid or the bundle of Link-grid

- access all the data of the Link

- exchange the data with the neighbour Links and all devices connected directly to the own Link-grid or to the bundle of Link-grid

- have the right to use and offer services to the neighbours

- have the right to dispute with the neighbours to guarantee a reliable and stable operation of his own Link_Grid

- decide the actions should be taken for a secure and optimal operation of the own Link or Link-bundle

- be incentivized to invest in adequate solutions, beyond physical reinforcements, to increase the flexibility of the Link or Link-bundle

- to facilitate effective and well-functioning retail markets

***Source**: "Secure Decentralized Architecture for Smart Grid Operation", accepted to be published in Electric Power Systems Research - Journal - Elsevier*

Demand response process:
line overload on high voltage grid

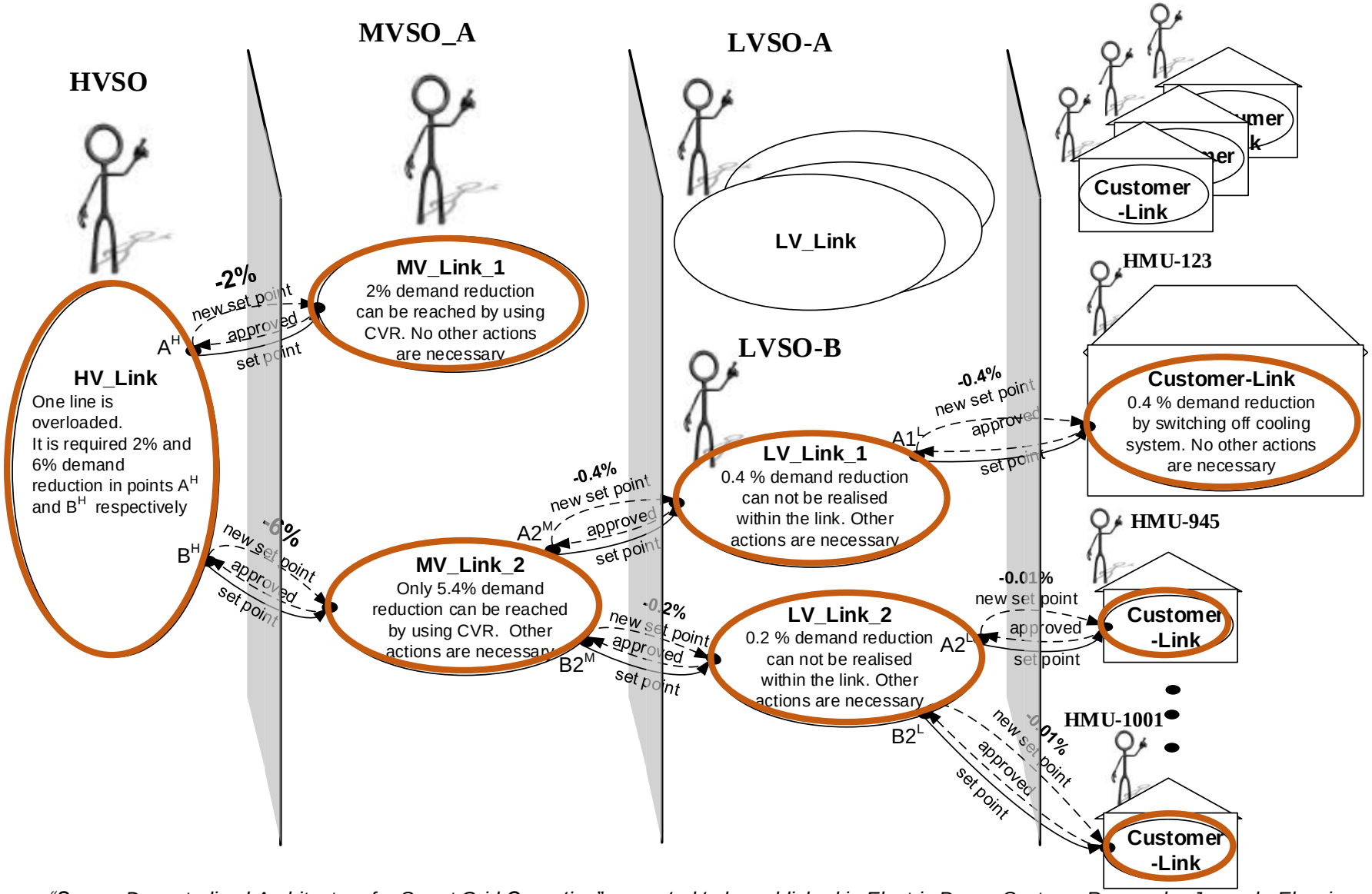

***Source**: "Secure Decentralized Architecture for Smart Grid Operation", accepted to be published in Electric Power Systems Research - Journal - Elsevier*

Dynamic security process for the HV_Link:
a) Interlink information exchange; b) Calculation model

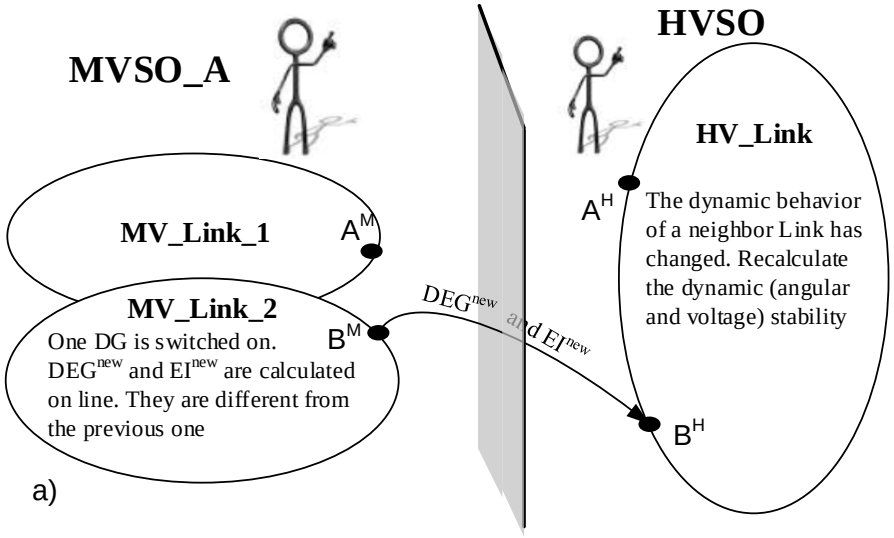

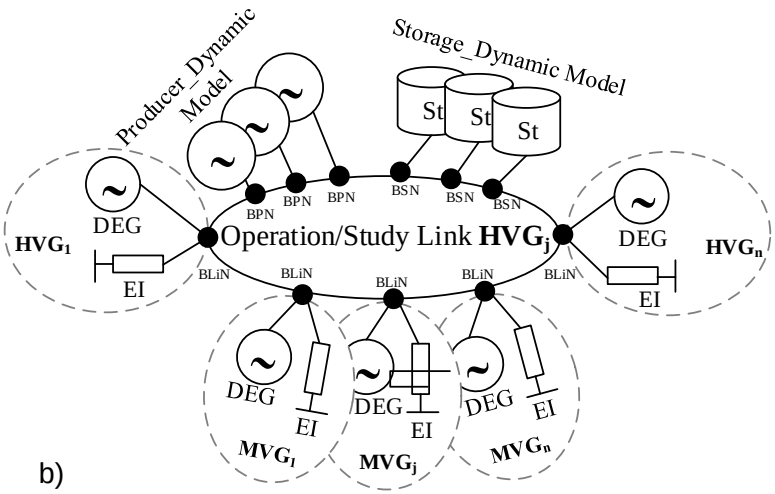

***Source**: "Secure Decentralized Architecture for Smart Grid Operation", accepted to be published in Electric Power Systems Research - Journal - Elsevier*

The scheduled data exchange on:

a) centralized and b) decentralized architectures

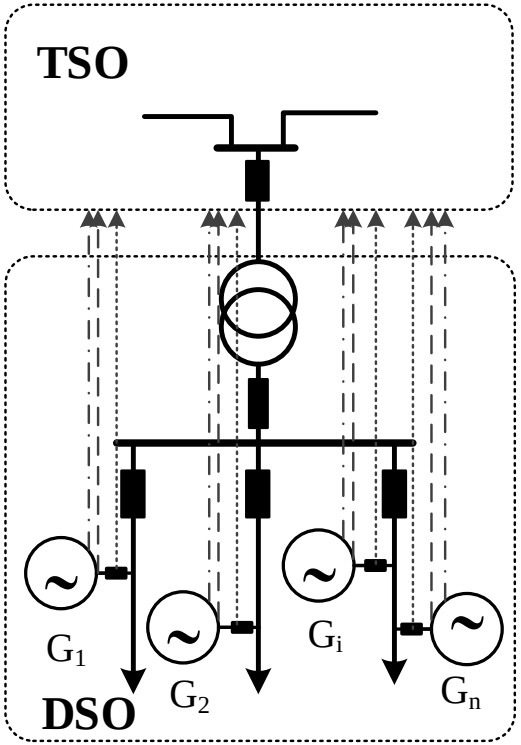

a)

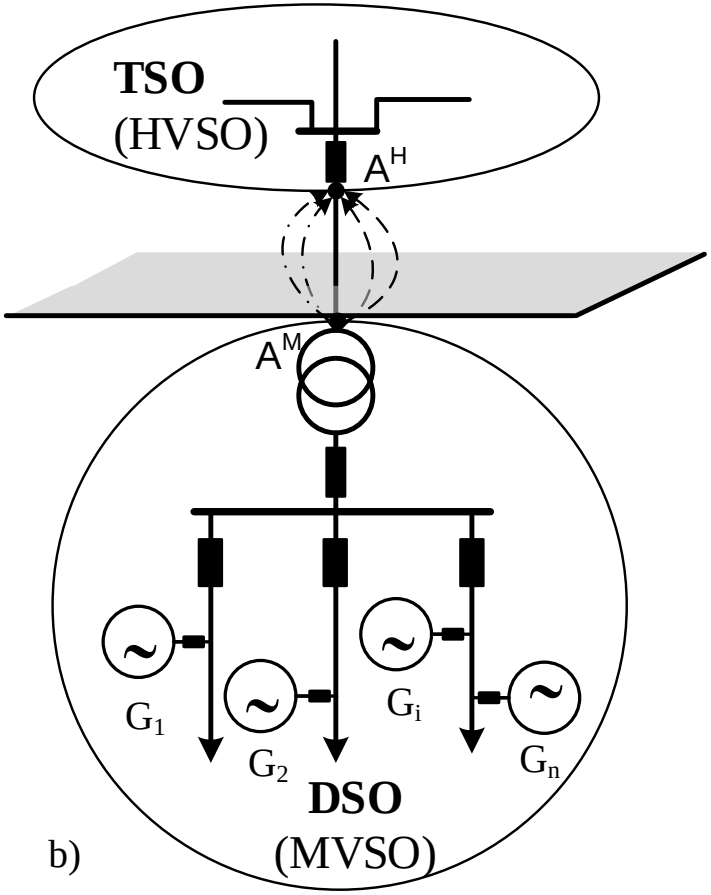

b)

Number of exchanged schedules ⟹ **$3 \cdot N$** **4**

N – Number of Significant Grid Users (Power Generating Facility Owner)

***Source**: "Secure Decentralized Architecture for Smart Grid Operation", accepted to be published in Electric Power Systems Research - Journal - Elsevier*

The scheduled data exchange on:

a) centralized and b) decentralized architectures

Article 25

Scheduled data exchange between TSOs, DSOs and Significant Grid Users according to Article 1(5)(a) and Article 1(5)(d)connected to the Distribution Network

1. **Each Significant Grid User which is a Power Generating Facility Owner** according to the Article 1(5)(a) and Article 1(5)(d) and with Connection Point to the Distribution Network, **shall provide its TSO** and/or its DSO **with its scheduled unavailability**, **Active Power restriction and its forecast scheduled Active Power output at the Connection Point.** Organization of the data exchange shall be defined according to the key organisational requirements, roles and responsibilities established in Article 16(6) to Article 16(8).

2. **Each Significant Grid User which is a Power Generating Facility Owner** according to Article 1(5)(a) and Article 1(5)(d) **shall provide to its TSO** and/or its DSO **any forecasted restriction in the Reactive Power control capability**. Organization of the data exchange shall be defined according to the key organisational requirements, roles and responsibilities established in Article 16(6) to Article 16(8).

***Source**: Network Code on Operational Security, 24 September 2013, ENTSO-e homepage*

Power system global component base IT architecture

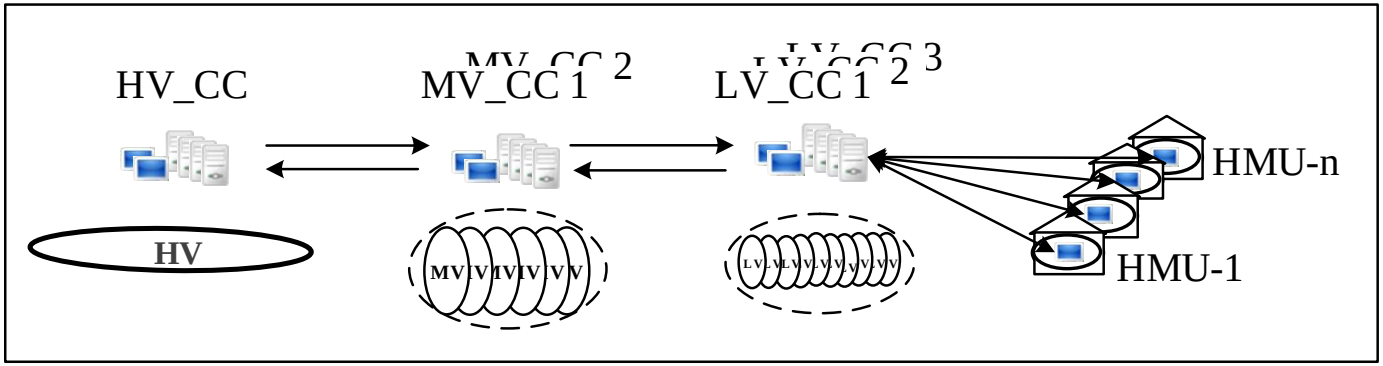

***Source**: "Secure Decentralized Architecture for Smart Grid Operation", accepted to be published in Electric Power Systems Research - Journal - Elsevier*

The accommodation of the different link_operators as market actors

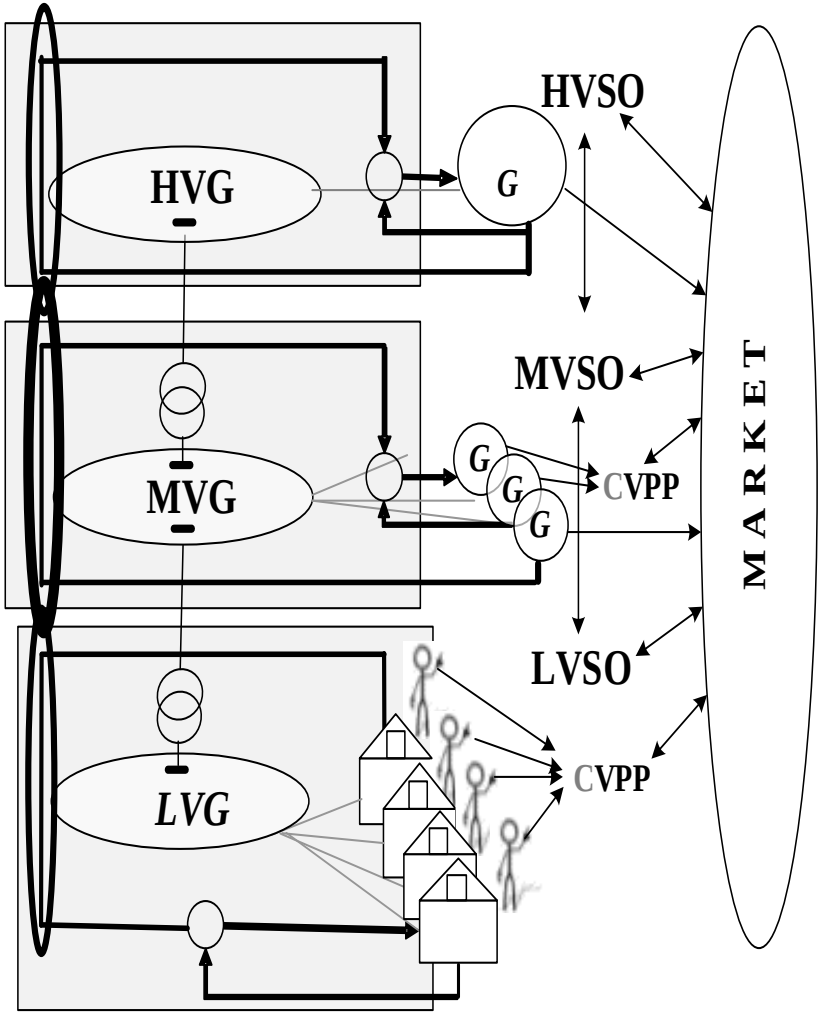

***Source**: "Secure Decentralized Architecture for Smart Grid Operation", accepted to be published in Electric Power Systems Research - Journal - Elsevier*

MV-Link, realized and operated in the framework of ZUQDE project

Reactive power and voltage control

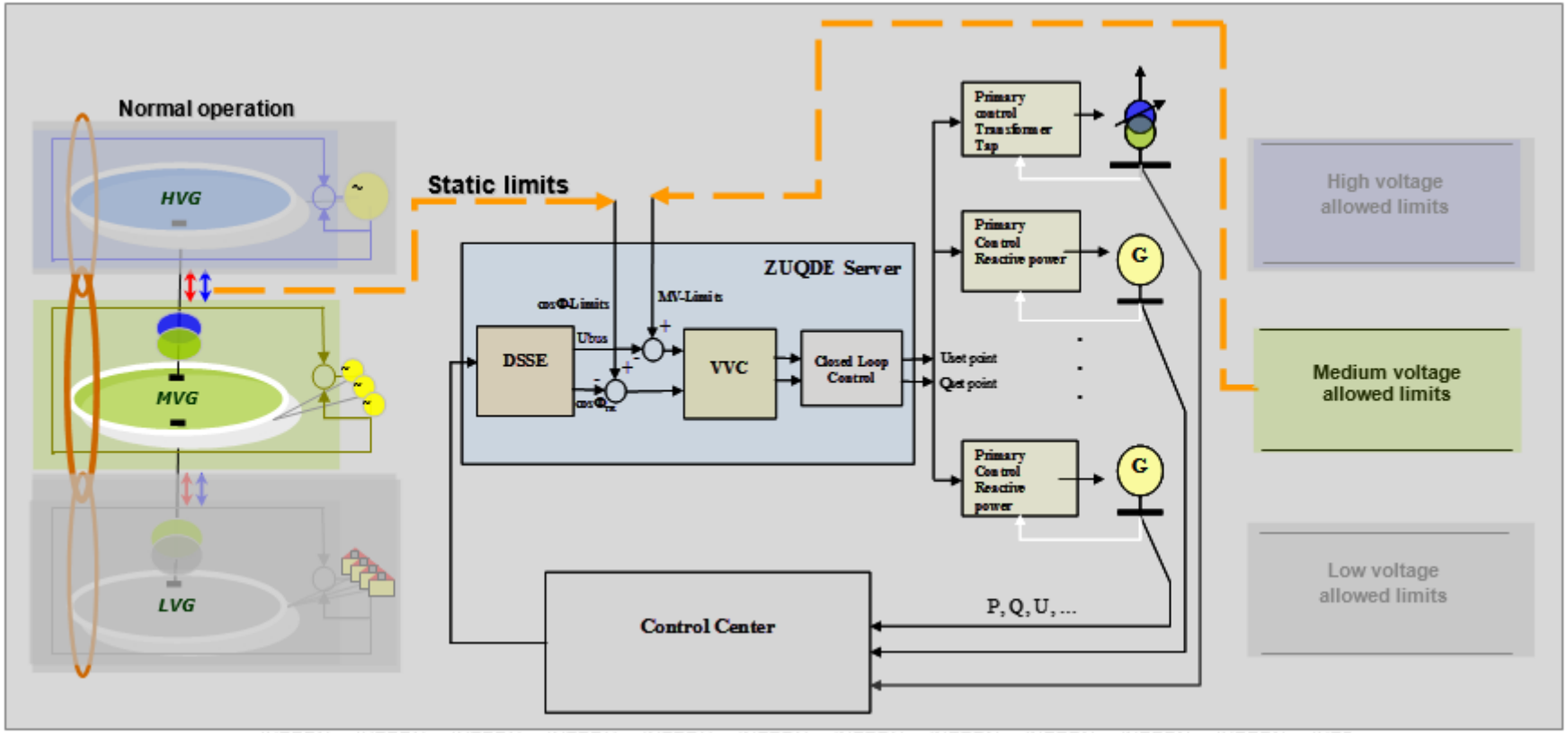

MV-Link, realized and operated in the framework of ZUQDE project

Reactive power and voltage control

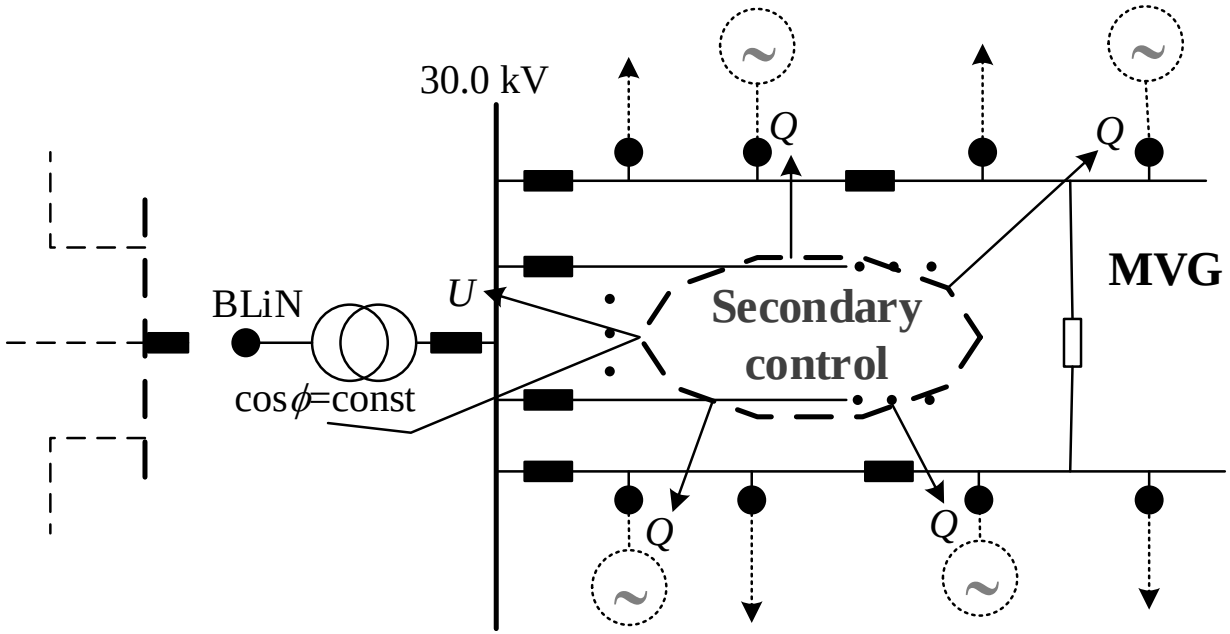

Conclusions

The new decentralised architecture for the power system operation:

- is kept simple and distinct

- has one major, standardised component, the “Link”, which presents the entire power grid and the costumer plants. The “Link” upgrades the “microgrid” paradigm.

- provides cyber security and data privacy by minimizing the number of the exchanged data

- facilitates all actual power system operation processes like load-generation balance, voltage assessment, outage managements, etc.

- facilitates the involvement of demand response in the grid operation

- fulfils the electricity market rules

Thank you for the attention

Albana Ilo
University of Technology of Vienna
Institute for Energy Systems and Electrical Drives
Telefon: +43 (0)1 58801 370114
Mail: albana.ilo@tuwien.ac.at