Insulation Condition Monitoring of Traction Drives based on Transient Current Signal Resulting from Differential and Common Mode Excitation

C. Zoeller and Th.M. Wolbank
Institute of Energy Systems and Electrical Drives,
Vienna University of Technology
Vienna, Austria

M.A. Vogelsberger
GSC/PPC-Drives VI
Bombardier Transportation Austria GmbH
Vienna, Austria

***Abstract*— In this work a method to detect stator insulation degradation of traction drives based on analyses of the transient current reaction caused by inverter switching is proposed. Two simple excitation methods are proposed to analyze the state of the inter-turn insulation as well as the groundwall insulation. With the standard hall-effect based closed loop current transducers used for the control of the machine as well, the transient signal ringing resulting from a switching transition of the inverter is analyzed. Based on a comparative monitoring method the transient part of the current response is analyzed to extract an insulation state indicator of the winding system. The approach is tested with a SiC-MOSFET inverter prototype as a source of excitation. Due to fast switching of the voltage source inverter and high output voltage dv/dt rates, the motor windings suffer under increased stress that leads to insulation degradation. With the ability to change the effective gate resistance small dv/dt variations and their influence on the proposed method is analyzed. The method is tested with 1.4MW and 5.5kW induction machines.**

Keywords*— *AC machines; fault diagnosis; insulation; electric breakdown; current transducers

I. Introduction

The proposed online monitoring method detects insulation deterioration at traction drive machines by evaluating the current response after a voltage step excitation. The transient current response is analyzed to determine the status of the stator insulation material regarding aging. If insulation degradation occurs, the parasitic electrical components (e.g. turn-turn, coil-coil and coil-earth capacitance), have changed and as a consequence the high frequency characteristics of the winding system. The paper proposes an approach to detect incipient degradation of stator insulation (inter-turn insulation and groundwall insulation), by evaluation of the drive's transient current response. With analyses of the frequency components of the transient current signal response, insulation monitoring can be implemented as a comparative method, using the data of the machine after initial operation as well as actual measurements. This work includes investigations on a medium power induction machine with 1.4 MW nominal power fed by a voltage source inverter (VSI) equipped with SiC semi-conductors and additional investigations on a low power 5.5 kW induction machine.

II. Traction Drives – Electrical (Parasitic) Components

The components of a whole drive system can be separated into three main parts, inverter, cabling and machine. New emerging semiconductor technologies, e.g. silicon carbide (SiC) or gallium nitride (GaN), lead to high dv/dt rates at traction drive systems. With focus on medium and high power railway traction drive systems, induction machines with squirrel cage are typically used. The stator winding system is build out of form-wound coils with a strengthened insulation system to enhance a reliable operation over decades. This insulation system is stressed by different factors, like high dv/dt rates, electrical, thermal, thermo-mechanical, mechanical and environmental strains. In case of thermal deterioration, probably the most common reason for insulation deterioration is an oxidation chemical reaction that starts to break the chemical bonds of the insulation at sufficiently high temperatures. The aged and brittle insulation system can then be peeled off the conductor. At form-wound stator coils the mica tape layers start to separate between strands and ground insulation, resulting in delamination. Turn short circuits may occur with local overheating at fault position, melting the copper and insulation and eventually leading to a ground fault. This process can rapidly appear and thus it is important to implement an insulation monitoring method which is able to detect inherent stator insulation degradation in an early stage. The detailed description of failure processes, root causes and symptoms of the other kind of stresses is omitted due to the lack of space and is given in [1].

Stator insulation faults are one of the most common faults [2]. Today the estimation of the insulation condition, affected by the aging process, and the remaining life time of the insulation of a machine is based on empirical methods based on extensive tests and dielectric measurements (e.g. dissipation factor tan(δ) tip-up, partial discharge PD, polarization index PI), which often demands the experience of the examiner [3]-[4].

The work to this investigation was supported by the Austrian Research Promotion Agency (FFG) under project number 83 84 78.

C. Zoeller is with the Institute of Energy Systems and Electrical Drives, Vienna University of Technology, 1040 Vienna, Austria (e-mail: clemens.zoeller@tuwien.ac.at).

M.A. Vogelsberger is with Bombardier Transportation Austria GmbH, GSC/PPC-Drives VI, 1220, Vienna, Austria (e-mail: markus.vogelsberger@at.transport.bombardier.com).

Th. M. Wolbank is with the Institute of Energy Systems and Electrical Drives, Vienna University of Technology, 1040 Vienna, Austria (e-mail: thomas.wolbank@tuwien.ac.at).

978-1-4799-7940-0/15/$31.00 ©2015 IEEE

With the high requirements regarding reliability and low maintenance cost the strategy of the proposed method assists in detecting stator insulation degradation in an early stage. In this work the insulation state is estimated online based on the high frequency current oscillation resulting from a voltage step excitation influenced by the parasitic capacitances (e.g. coil-coil, turn-turn, phase-phase, phase-ground). In [4] and [6] the parasitic components of a winding system change, after a high number of thermal- or mechanical aging cycles have been applied. Insulation degradation until a breakdown of the insulation is usually a slowly developing process, first starting with the deterioration of the turn-turn insulation and finally leading to higher severity faults like phase to phase or phase to ground, respectively. This enables a monitoring method where the tendency of different measurements indicates changes in the insulation state.

Additionally, the target and key requirements of the proposed online insulation monitoring method is the exploitation of the existing current transducers used for the control of the machine.

III. Principle of the Proposed Insulation Condition Monitoring Method

In [7] first investigations of the proposed insulation condition monitoring method based on the evaluation of the transient current transducer's response are presented. To observe the winding insulation condition of each phase, the voltage step response of the phase is analyzed with the corresponding current transducer. In Fig. 1 two current responses of the machine (blue – machine with healthy insulation; green – same machine with emulated insulation degradation), measured with current transducer phase L1, as a reaction to a voltage switching transition applied to that phase from lower short circuit to DC-link level is depicted. The typical dominant inductive behavior $i(t) \approx 1/L \int_{-\infty}^{t} u(\tau)d\tau$ of the current response is visible in both traces, and also depends on inherent machine asymmetries like slotting or saturation. This fundamental wave component contains no significant information for the estimation of the insulation state and is eliminated. The transient part, decaying after the first 20µs, shows different characteristics for these both machine states and gives evidence about the insulation state.

As aforementioned in section II indicators suitable for insulation degradation are the parasitic capacitance values and thus in this work the degradation of the insulation system is emulated with a capacitor placed parallel to the winding system of the machines. The 1.4 MW machine is equipped with fiber-insulation wires and taps accessible at terminal connection block. Different fault scenarios can be analyzed by varying the position and size of the capacitor, which emulates a change of the parasitic winding capacitances influencing the shape of the high frequency oscillation. The deviation of the transient part of these scenarios is analyzed in the frequency domain by determining the accurate start point of the ringing and applying a simple rectangular windowing function. Since the proposed method is a comparative method, it is of vital importance that the measurements reach a high degree of reproducibility. As can be seen in the enlarged lower subfigure of Fig. 1, the standard deviation ±σ and the minimum and maximum values of the spectral components are visible. The variance of the data points in the spectrum of the 50 recorded current responses is very low and high reproducibility is given.

In Fig. 2 the spectra of the transient part of the preprocessed current responses of Fig. 1 are depicted.

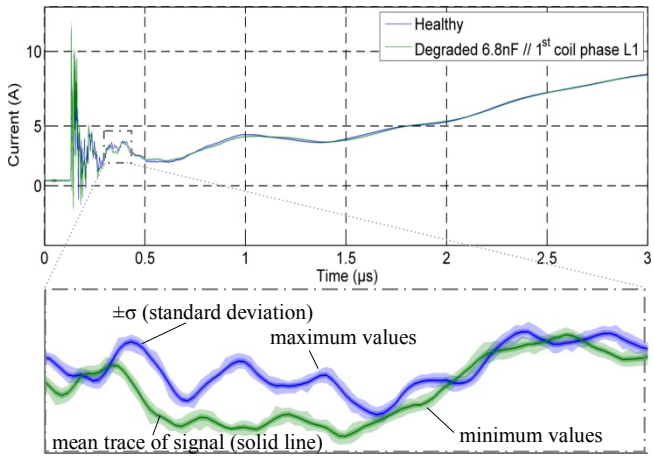

Fig. 1 Current response after step excitation

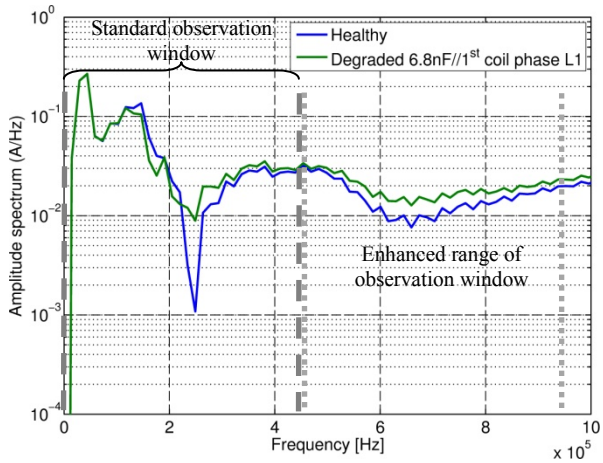

Fig. 2 Spectra of preprocessed current responses

The frequency range is depicted up to 1 MHz, containing the important range for this machine type. Previous investigations of medium power machines verify frequency components suitable for the estimation of the insulation state from 50 kHz to 0.5 MHz. The range can be extended to 1 MHz with the considerations of higher variances.

With the root mean square deviation (RMSD) the deviation of the two traces (healthy and degraded) are expressed with an indicator, denoted with insulation state indicator ISI according to equation (1).

$$ISI_p = RMSD_p\left(Y_{ref,p}, Y_{deg,p,k}\right) = \sqrt{\frac{\sum_{i=1}^{n}\left(Y_{ref,p}(f_i) - Y_{deg,p,k}(f_i)\right)^2}{n}} \quad (1)$$

Because the online monitoring method is implemented as a comparative method, the measurement of the initial operation machine state, in this work denoted as reference state, is stored

as a fingerprint of the drive system. This reference machine spectrum is denoted with $Y_{ref,p}$. The index p identifies the investigated phase. The mathematical operation of the median is used at each discrete frequency point f_i for a high quantity of consecutive measurements conducted for this machine state. The variable $Y_{deg,p,k}$ is the amplitude spectrum of the emulated insulation degradation measurement or a measurement after several operation hours with an aged machine insulation system. The index k represents the consecutive number of repeated measurements and variable n depends on the observed frequency range (standard range 50 kHz - 500 kHz).

A. SwitchingTtransition – Differential Mode

A scheme of the test stand consisting of the inverter, cabling, machine and the electrical components is given in Fig. 3. It can be seen that the emulated insulation degradation (fault capacitor C_{degrad_inter} and C_{degrad_Gnd}) affects phase L1 only

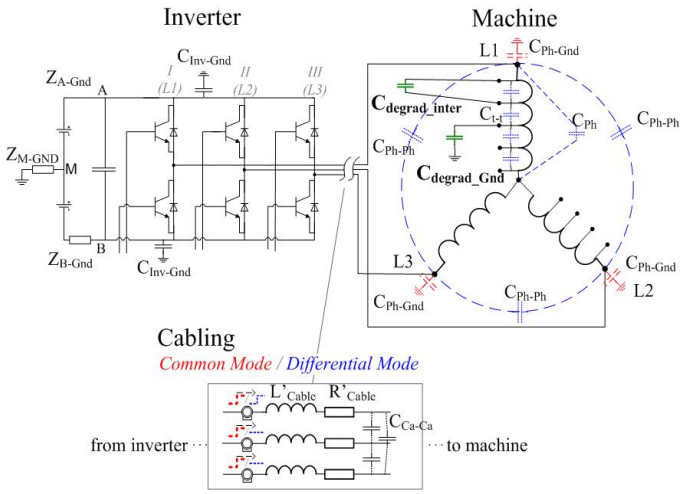

Fig. 3 Scheme of the test stand and description of "common mode" and "differential mode" excitation

With attention to the switching transition, denoted "differential mode" excitation, starting with all phases on lower DC-link level potential B and only switching half-bridge I to upper DC- link level A, the inter-turn insulation is analyzed, which is able to detect a deviation caused by small C_{Fault_inter} values in the range of about 1nF [7]. Current time signals and spectra for 6.8nF parallel 1st coil, see Fig. 1 and Fig. 2. The voltage step applied by the "differential mode" can be either in positive or in negative direction of the corresponding phase leading to two excitation directions. Furthermore for each excitation direction there exist two ways to establish the corresponding inverter output voltage phasor, first starting with all three phases connected to low side of the dc potential and then initiate a transition of the corresponding inverter lag by turning off the low side transistor and turn on the high side one of the corresponding phase L1. For negative excitation direction B the inverse switching transition from the high side dc potential is applied. Second positive excitation direction is to start with all three high side transistors turned on and initiate the transition by turning off the high side transistors and turning on the low side transistors of the two remaining phases Again, for the last possible negative excitation direction the switching transitions starting at low side of the dc potential.

All these possibilities can be considered to enable the monitoring of the insulation state during operation with PWM based inverter-fed drives. The influence of the switching transition is not part of this work and is analyzed in further studies.

B. Switching Transition – Common Mode

Analyzing the state of the groundwall insulation is done by changing the potential of all three phases denoted with "common mode" excitation in Fig. 3 (switching half-bridge I, II and III after starting all phases from potential B). In Fig. 4 the current response for the healthy (blue trace) and the same machine with emulated groundwall insulation degradation (green trace, 6.8nF connected at the 3rd coil of phase L1 to ground) are depicted.

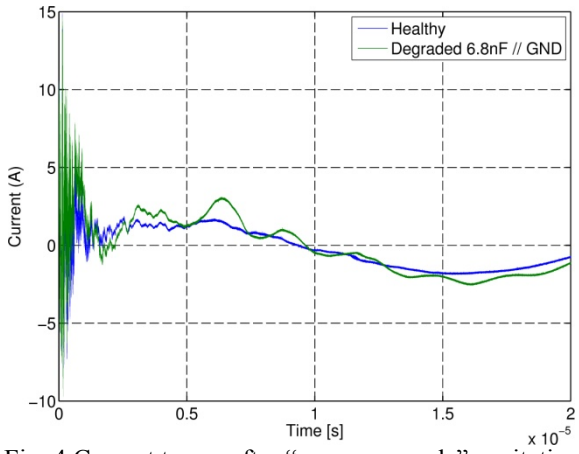

Fig. 4 Current traces after "common mode" excitation

IV. Experimental Investigations

For the following investigations a SiC-MOSFET based inverter prototype has been designed and implemented, with high dv/dt rates up to 25kV/µs and amplitudes at 800V. The test bench is equipped with different hall-effect based closed loop transducers with bandwidth specifications of up to 150kHz (di/dt of 50A/µs) placed into a shielded box to prevent disturbing emc influences. Additionally Rogowski coils with a specified bandwidth of 16 MHz are also used to verify the results. The parasitic capacitance value of the complete winding system of the test machine (1.4 MW induction machine) measured to ground is 63nF.

A. Differential mode excitation - 1.4 MW induction machine

Focusing only on one transition method at the "differential mode" excitation (positive voltage step applied from turning on the high-side switch of the corresponding phase with initial value of lower dc-link level for all phases), the approach of emulating the insulation degradation by placing capacitances parallel the winding is analyzed starting from the first coils of a phase near the line-end toward the coils near the star point.

Varying the position of the parallel capacitance it was observed that the highest signal deviations occur if the degradation is emulated at the first coil at the line end. Decreasing deviation is observed if the same capacitor is

placed parallel to a single coil in the middle of a phase or at the last coil at the star point. This tendency can be seen in Fig. 5 which shows the result of the obtained indicators (ISI values) when the capacitance (1nF; 6.8nF and 15nF) is placed parallel one coil and the position is consecutively changed towards the star point. The measurements are shown for phase L1 only, the same phase at which the insulation degradation is emulated. Additionally it is observable that at coil number 7 the effect of the parallel capacitor shows hardly deviations. After this coil number a small bump is visible, but the values are still very low. This bump seems to appear because of reflection phenomena of the fast propagated wave that is partially transmitting through the line terminal and non-linear voltage distributions within the strand of the machine [10].

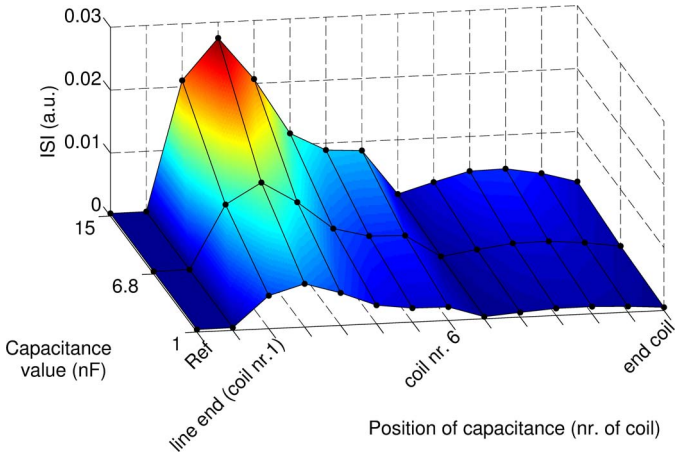

Fig. 5 Decreasing ISI indicator when capacitor 1nF, 6.8nF and 15nF is placed parallel one coil toward star point / differential mode excitation

The line-end coils suffer most from stress through overvoltage as described in the literature [9] and thus insulation degradation is likewise highest at the first windings.

B. Common mode mode excitation - 1.4 MW induction machine

Analyzing the state of the groundwall insulation is done by changing the potential of all three phases denoted with "common mode" excitation.

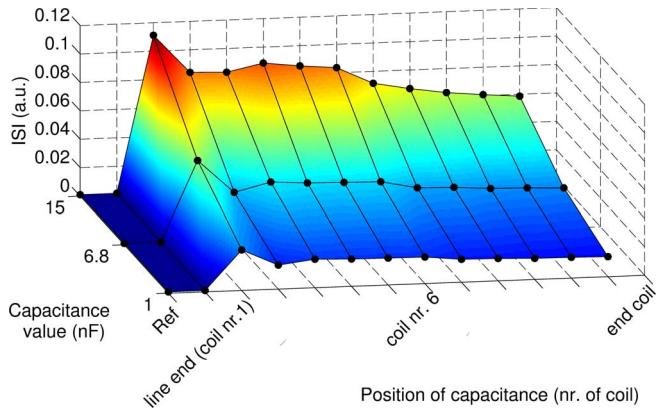

Fig. 6 Decreasing ISI indicator when capacitor 1nF, 6.8nF and 15nF is placed from one coil toward earth potential / common mode excitation

The position dependent analyses result in the following figure Fig. 6. Again the results obtained from phase L1 and analyzed with the data of the transducer in this phase is shown with variation of the position of the capacitor placed from one coil toward earth potential (1nF, 6.8nF and 15nF).

The values show a relative linear decreasing behavior. As a result of the switching transition to all phases of the machine the machine's parasitic groundwall insulation capacitances are excited. The emulation of a change in the ground capacitance at the first coil at line end shows the highest deviation in the current signal compared to the other cases.

To investigate which frequency components are most affected in case of inter-turn insulation and ground wall insulation degradation as well, Fig. 7 shows the fractions on the RMSD value (insulation state indicator) of the frequency components on a percentage basis for 33 consecutive measurements of phase L1. The upper figure illustrates which spectral components are mostly affected in case of an inter-turn insulation degradation and "differential mode" excitation and the lower figure in case of a groundwall insulation degradation and "common mode" excitation. The deterioration of the groundwall insulation can be separated from an inter-turn deterioration through the higher deviation in the lower frequency spectrum below 100 kHz.

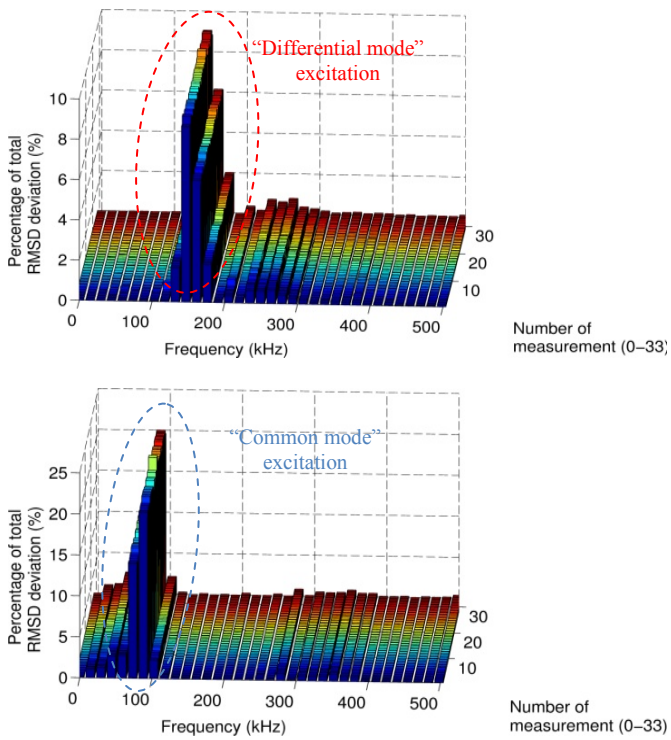

Fig. 7 Distribution on a percentage basis of the frequency components for all 33 consecutive measurements; upper figure inter-turn insulation and "differential mode"; lower figure groundwall insulation and "common mode" excitation

A strict threshold to separate these kinds of deterioration effects is not possible, because the affected frequency components also change with the position of the fault emulation. So a degradation located at the first coils of a strand near the line end is not similar to degradation at the last coils of a strand near the star point.

In the following two sections a short overview of the investigations of random-wound insulation system and the two different types of excitation modes is given.

C. *Influence of dv/dt rates*

With the used SiC-MOSFET inverter design both switching directions can be controlled individually by different effective gate resistors R_{G_on} and R_{G_off}.

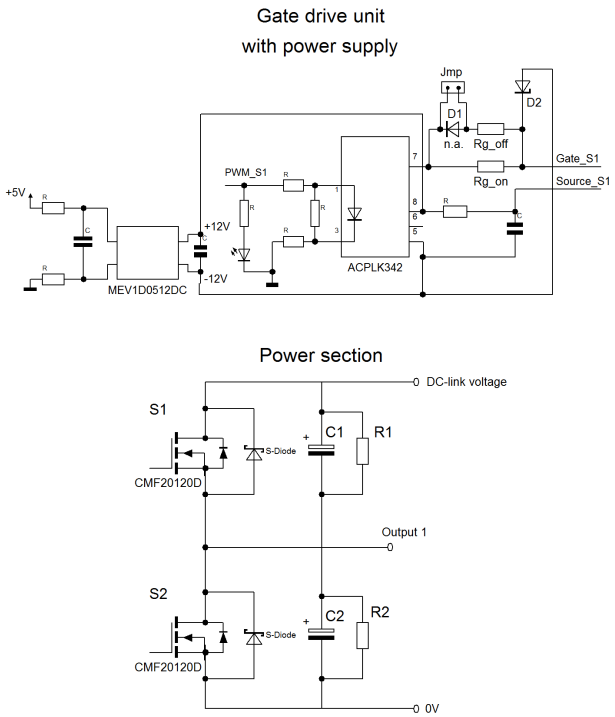

Fig. 8 Circuit diagram of the designed and implemented test pulse generator with SiC technology (only one half-bridge visible)

A higher gate resistance value reduces the charge and discharge current to or from the gate, resulting in lower dv/dt rates of the output voltage. On contrary, a low resistance value gives fast switching operation and reduces also the switching dissipation. However, due to the resulting high di/dt values of the main current part, overvoltage peaks may occur depending on the used load.

The ability to vary the output voltage steepness by adjusting the gate resistor makes available to analyze the sensitivity of the proposed method regarding inverter switching speed (dv/dt rates). In Fig. 9 the blue trace depicts the case with a rather low gate resistor of 11Ω, resulting in a dv/dt rate of about 20kV/µs. A second trace gives the results for 50Ω gate resistor leading to a dv/dt of 10kV/µs. The difference is hardly visible and only with a resistance value ten times higher (about 110 Ω) the dv/dt rate is about 5kV/µs. The deviation between the spectra is visible in the right subfigure in case of a gate resistance of 11Ω and 50Ω. In the observed frequency range from 50kHz to 500kHz depicted with the shaded gray area the deviation caused by small variations of the dv/dt inverter output voltage in the amplitude spectrum is negligible.

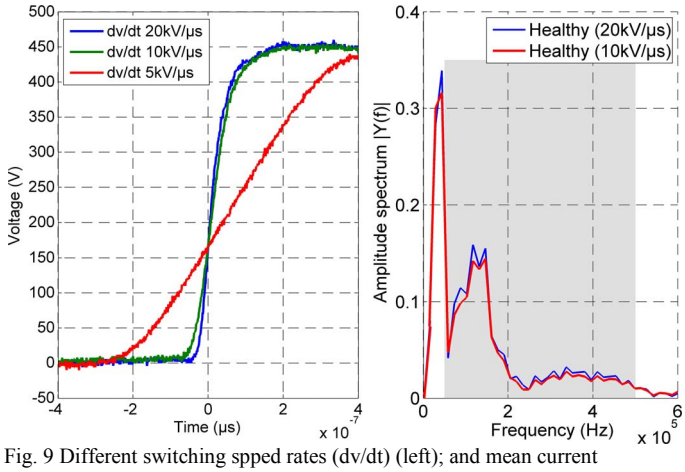

Fig. 9 Different switching spped rates (dv/dt) (left); and mean current spectrum traces of 50 healthy current signals for two different dv/dt scenarios (right) (dv/dt 20kV/µs blue trace and dv/dt 10kV/µs red trace)

D. *Differential mode excitation - 5.5 kW random-wound induction machine*

Investigations are also conducted with a random wound induction machine with nominal power of 5.5kW. In random-wound stators, copper conductors may move under magnetic forces during start-up or normal operation leading to insulation degradation and finally to a failure due to abrasion. Additionally, thermal exposure is one of the most common causes of gradual insulation deterioration, resulting in a loss of mechanical strength and lower electrical strength [8]. The insulation system is different in many ways compared to a form- wound coil insulation system. Some failure mechanism only occur in random-wound induction machines and some only on form-wound stators. However, many of them occur in either machine types.

In Fig. 10 the results of the 5.5kW random-wound induction machine tested under different insulation degradation scenarios at an additional tests bench with an IGBT inverter (dv/dt~6kV/µs) is shown. This machine has only certain parts of the winding with tabs accessible but effects of the location of the fault capacitor within the winding can be simulated as well. The time signals in Fig. 10 and Fig. 11represent the first 10µs of the current response after voltage excitation. The blue trace act as the first initial measurement and the red trace with a capacitor of 220pF in parallel to the first group of coils (6 coils) show a small but reproducible deviation in the time domain. The right bar plots attached to the time signals show the calculated ISI values resulting if the same signal processing steps and calculation of the deviation in the frequency domain as described above is applied. These figures illustrate the increasing tendency of the indicator starting at the initial machine state, denoted with “Reference” followed by “220pF//1st turn L1” showing an incipient insulation degradation in an early stage and finally “220pF//1st coil L1” and “220pF//1st coil group L1” resulting in insulation degradation with higher severity.

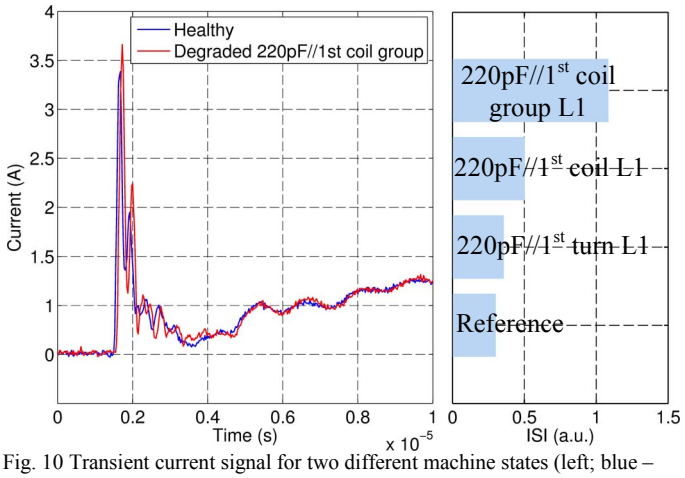

Fig. 10 Transient current signal for two different machine states (left; blue – healthy machine state; red- emulated insulation degradation with 220pF//1st coil group L1) and ISI indicator values for 3 degradation scenarios (right).

E. Common mode excitation - 5.5 kW random-wound induction machine

Investigations of the groundwall insulation are done by changing the potential of all three phases denoted with "common mode" excitation. Again, in Fig. 11 the time signals represent the first 10µs of the sampled signal of the current transducer in the phase of the impedance modification. As aforementioned at the investigations of the 1.4MW induction machine, the emulation of a change in the ground capacitance at the first coil at line end shows the highest deviation in the current signal compared to the other cases. The last accessible coil in phase L1, coil number 6 of 12, show the lowest indicator of the emulated degradation scenarios.

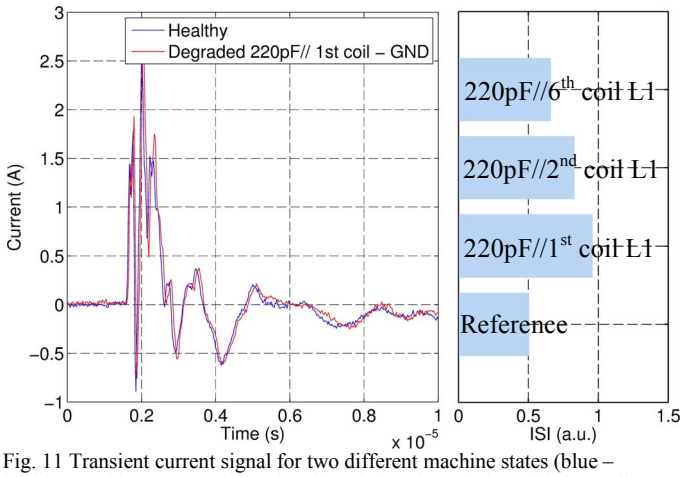

Fig. 11 Transient current signal for two different machine states (blue – healthy machine state; red- emulated insulation degradation with 220pF//1st coil group L1) and ISI indicator values for different groundwall insulation degradation scenarios.

The capacitance value of the complete winding system of the machine measured to ground is 1.5nF. Additional investigations with lower capacitor values of about 6% of the total winding capacitance show that a deviation compared to the initial reference machine state is still observable using the indicator value.

V. Conclusion

A method based on evaluation of the transient current response to inverter voltage step excitation to detect changes in the machine's insulation system is presented. Key requirement and target of the proposed pre-active insulation condition monitoring is the usage of the already existing current transducers. The applicability of the method is verified on a high power (1.4MW) traction drive machine with form-wound coils and an insulation system designed for nominal voltages of several kV and a 5.5kW random-wound induction machine for a low voltage application. The investigations for different insulation deterioration scenarios are done by emulating a capacitive change of the winding system with a capacitor placed parallel to parts of the winding using tabs. Despite this approach will emulate an increase in the total winding capacitance and in theory the capacitance of a degraded insulation system is decreased, the used method give evidence which deviations are detectable. As a single measurement value of an insulation system, e.g. capacitance or dissipation factor, is not sufficient to describe the strength or status of an insulation system, only a change caused by a capacitance deviation is important [11].

Due to the fact that the transient current response has to be sampled with a high resolution to observe a change in the insulation state, the authors recommend an ADC unit with a time resolution of at least 1MS/s. To reach a higher resolution different sampling method approaches e.g. equivalent time-sampling could be implemented to enhance the accuracy and prevent loss of information.

Acknowledgement

The work to this investigation was supported and funded by the Austrian Research Promotion Agency (FFG) under project number 838478.
The authors want to thank Bombardier Transportation Switzerland (GSC/PPC-CoE2, head M. Joerg), and Bombardier Transportation Austria GmbH (GSC/PPC - Drives; electrical calculation group) for the generous support. Further the authors want to thank Product Development GSC/PPC Drives (M. Bazant) for PDev funding and feedback as well as Mr. Baro (GSC/PPC-Drives Global Engineering Head) for the great support. Thanks also goes to LEM - Company (especially Mr. W. Teppan) and National Instruments Austria (G. Stefan) for the cooperation and the generous support.

References

[1] G. C. Stone, E. E. Boulter, I. Culbert, and H. Dhirani, "Electrical Insulation for Rotating Machines". *IEEE Press*, 2004.

[2] IEEE Com mittee Report; "Report of large motor reliability survey of industrial and commercial installation," *IEEE Trans.on Industry Applications*, vol.21, pp.853–864, 1985.

[3] Maussion, P.; Faucher, J., "Design of experiments for low voltage electrical machine insulation lifetime modeling," *Industrial Electronics (ISIE), 2010 IEEE International Symposium on* , vol., no., pp.1259,1264, 4-7 July 2010.

[4] Neti, P.; Grubic, S., "Online broadband insulation spectroscopy of induction machines using signal injection," *Energy Conversion Congress and Exposition (ECCE), 2014 IEEE* , vol., no., pp.630,637, 14-18 Sept. 2014.

[5] Perisse, F.; Werynski, P.; Roger, D., "A New Method for AC Machine Turn Insulation Diagnostic Based on High Frequency Resonances," *Dielectrics and Electrical Insulation, IEEE Transactions on* , vol.14, no.5, pp.1308,1315, October 2007.

[6] Farahani, M.; Gockenbach, E.; Borsi, H.; Schaefer, K.; Kaufhold, M.; "Behavior of machine insulation systeMHz subjected to accelerated thermal aging test," *IEEE Transactions on Dielectrics and Electrical Insulation,* vol.17, no.5, pp.1364-1372, 2010.

[7] C. Zoeller, M. A. Vogelsberger, Th. Wolbank, "Separation of Fundamental Wave and Transient Components of the Current Signal for Machine Insulation State Monitoring", *IECON 2014 - 40th Annual Conference of the IEEE* , 29.Oct -13 Nov. 2014.

[8] Perisse, F.; Werynski, P.; Roger, D., "A New Method for AC Machine Turn Insulation Diagnostic Based on High Frequency Resonances," *Dielectrics and Electrical Insulation, IEEE Transactions on* , vol.14, no.5, pp.1308,1315, October 2007.

[9] Nussbaumer, P.; Zoeller, C.; Wolbank, T.M.; Vogelsberger, M.A., "Transient distribution of voltages in induction machine stator windings resulting from switching of power electronics," *Industrial Electronics Society, IECON 2013 - 39th Annual Conference of the IEEE , vol., no., pp.3189,3194, 10-13* Nov. 2013.

[10] Kaufhold, M.; Aninger, H.; Berth, M.; Speck, J.; Eberhardt, M., "Electrical stress and failure mechanism of the winding insulation in PWM-inverter-fed low-voltage induction motors," *Industrial Electronics, IEEE Transactions on , vol.47, no.2, pp.396,402*, Apr 2000.

[11] Farahani, M.; Borsi, H.; Gockenbach, E.; "Study of capacitance and dissipation factor tip-up to evaluate the condition of insulating systems for high voltage rotating machines," *Electrical Engineering*, vol.89, no.4, pp.263-270, 2007.