Lattice-girder floor slabs and double-wall elements in bridge construction

Erecting bridges using lightweight precast thin-walled concrete girders

The Institute of Structural Engineering of the TU Wien has been working on a construction method with lightweight precast thin-walled concrete bridge girder that would enable concrete to become an attractive alternative option to steel when it comes to the construction of bridges without formwork. The main idea consists of using precast elements in collaboration with in-situ concrete in order to create lightweight trough-shaped or box-sectioned bridge girders that can easily be handled during transport and mounting. The precast elements serve as permanent formwork for the subsequently added in-situ concrete and can therefore considerably reduce the use of formwork and falsework on the construction site. The focus point of the design with these precast elements is the calculation of the different construction phases. Designs of short span as well as large span bridges with trough-shaped and box-sectioned bridge girders respectively, will be discussed.

Sara Reichenbach and Johann Kollegger, Institute of Structural Engineering / TU Wien, Vienna, Austria

Lattice-girder floor slabs and double-wall elements have been successfully used in building and industrial construction for decades. These precast elements of 50 – 70 mm thickness serve as permanent formwork for the subsequently added in-situ concrete creating a monolithic structure. The high prefabrication level allows the construction period to be significantly minimized. The main goal is the development of lightweight concrete girders that can compete with the span-weight ratio of steel girders during construction.

Possible applications of these precast elements for bridge and civil engineering structures have been investigated at the Institute of Structural Engineering of the TU Wien (Technical University of Vienna, Austria) in collaboration with the Association of Austrian Concrete and Precast Plants (VÖB), Austrian National Railways (ÖBB), the Austrian Expressway and Highway Financing Company (ASFINAG), the engineering office FCP - Fritsch, Chiari & Partner ZT GmbH and the Austrian Ministry for Transport, Innovation and Technology (bmvit). The objective is the development of precast concrete girders light enough for transport and/or erection by conventional transport and lifting equipment and for the construction using conventional and/or innovative building methods, as for example the balanced lift method, which was also developed at the Institute of Structural Engineering of the TU Wien [1].

Designing with trough-shaped bridge girders

For the application of the precast elements in bridge construction the first developed cross-sections were trough-shaped. It was shown that field spans of approximately 30.0 m were attainable [2]. After the experimental evaluation of cross-sections with diverse dimensions various motorway crossings as well as motorway bridges were designed. A detailed design of two bridges of the S7 motorway in Austria crossing the Lafnitz and Lahnbach Rivers was commissioned by the ASFINAG. These bridges would be built using the balanced lift method, which incorporates the application of the precast trough-shaped bridge girders.

Large-scale tests

In the course of various research projects multiple large-scale tests were conducted [2]. To begin with, the production methods for trough-shaped cross-sectioned girders were examined, by producing girders out of lattice-girder floor slabs as well as out of double-wall elements. A completed precast girder out of lattice girder floor slabs and a 200 mm strong base plate with ducts for the required tendons for post-tensioning is shown in Figure 1. Valuable insights were provided on the stability and the improvement of the structural details through numerous loading tests. Girders with the length of 30.0 m were subjected to torsional loading and loading due to the filling with in-situ concrete. Long-term measurements were additionally performed in order to record creep deformations.

Implementation [1]

The motorway bridges of the motorway in south-east of Austria, were originally intended to be built by incremental launching using steel-concrete-composite structures. By changing the design to post-tensioned concrete bridges a more cost-efficient solution was presented, lowering the construction cost by 30 %. A comparison of the two designs can be seen in Figure 2 with the design based on the balanced lift method in dark grey and the steel-concrete-composite design in light grey. Attention should be paid to the difference in height, visible in Section A-A of Figure 2, with the concrete bridges being over 50 % slimmer than the steel-concrete-composite bridges, with 2.0 m and 4.6 m, respectively.

The underlying idea of the balanced lift method is to assemble the key elements of the bridge in a vertical position and then rotate the bridge girders from the vertical into the horizontal position with the aid of compression struts. For bridges built with the balanced lift method, the weight of all the elements that are put in motion during the lifting or lowering operations is of utmost importance.

Fig. 1: Precast through-shaped girder

DI Sara Reichenbach, born 1988, studied Civil Engineering at TU Wien (Technical University of Vienna) in Austria. Since 2013 she is a research assistant at the Institute of Structural Engineering at TU Wien working with thin precast elements and the balanced lift method, a bridge building method developed at TU Wien.
sara.reichenbach@tuwien.ac.at

Prof. Dr. -Ing. Johann Kollegger, born 1956, studied Civil Engineering at TU Graz (Technical University of Graz) in Austria, at the University of California in Berkeley in the USA and at the University of Kassel in Germany. Before becoming Professor at the TU Wien, he gained practical experience as a consulting engineer, was head of the design office of Philipp Holzmann AG in Hannover and later on general manager of VSL Vorspanntechnik (Deutschland) GmbH.
johann.kollegger@tuwien.ac.at

The cross-section, shown in Section B-B of Figure 2, is designed with two separate carriageways each being a webbed t-bean with a width of 14.5 m. During the erection using the balanced lift method only precast through-shaped bridge girders are existent, shown in dark grey in Section B-B of Figure 2. After all through-shaped girders are mounted they can be filled with concrete and the deck slab can be cast.

Large-scale tests of the balanced lift method

In the course of the research projects and the detailed design of the motorway bridges it became possible to carry out a large-scale test of the balanced lift part (72 m in length) of the bridges described in the previous section. The large-scale test was based on a 70 % scaling of the designs for the motorway bridges, resulting in a total length of 50.4 m [1]. After four days of construction, the bridge was ready for the balanced lift (in this case lowering) part of the construction process. The lowering process was carried out by slowly and simultaneously lowering the two top points of the bridge girders with the help of two mobile cranes. After the lowering process the geometry of the structure was checked before filling the nodes at the pier with concrete in order to provide a higher resistance against horizontal wind loads. The large-scale model is shown in Figure 3.

Designing with box-sectioned bridge girders

In order to erect bridges with large spans using lightweight thin-walled precast concrete girders, sturdy box-sectioned cross-section had to be developed. Double-wall

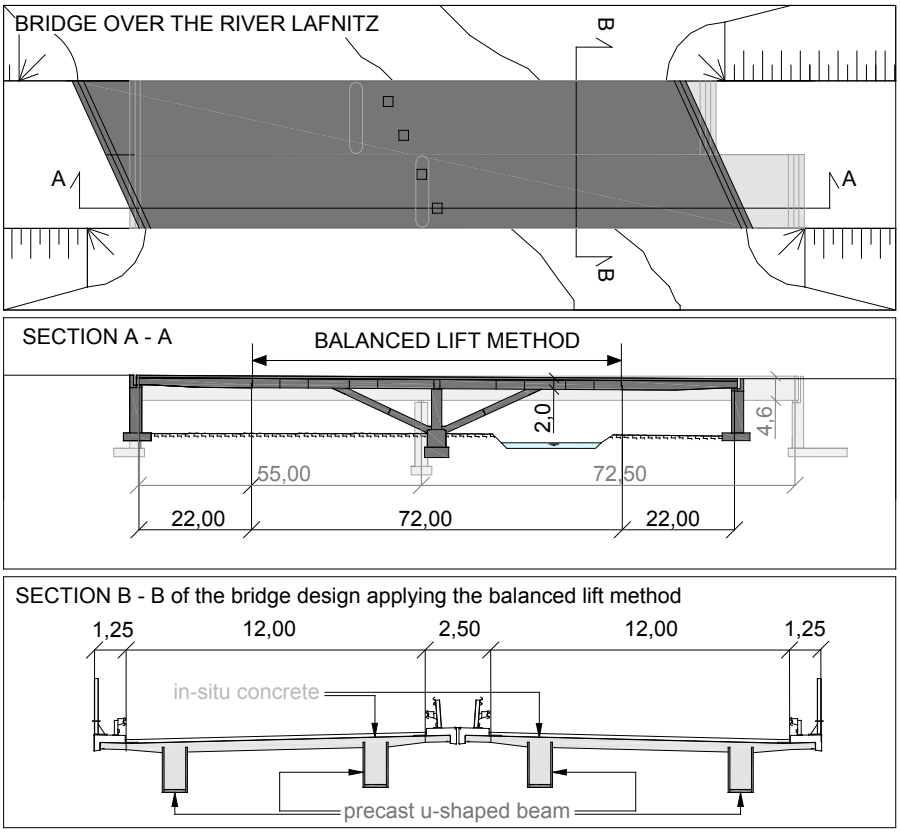

Fig. 2: Comparison of the original steel-concrete-composite bridge design (light grey) and the design based on the balanced lift method for a post-tensioned concrete bridge (dark grey) over the Lafnitz River

Fig. 3: Large-scale test of the designed bridge over the Lafnitz River utilising precast elements

elements were chosen as webs held together by thin precast elements (lattice-girder floor slabs).

Large-scale tests

Large-scale tests were then used to provide valuable insight into the manufacturing process, production flow and the resulting stability. Two box-sectioned bridge girders, with a height of 2.89 m and a width of 6.0 m (Figure 4), were built and tested. The results confirmed that the fabricated cross-sections possess enough stability to be transported and installed but need extra support for the concreting of the deck slab. With the results a static calculation model was calibrated allowing reliable predictions for further examinations of the cross-sections with variable dimensions [3].

Implementation [4]

Following on from the favourable experience gathered in the production and testing of the lightweight box-sectioned bridge girders it was decided to participate, in close collaboration with the engineering office FCP – Fritsch, Chiari & Partner ZT GmbH, in a competition for the construction of two bypass bridges for the Voest Bridge across the Danube river in Linz, Austria. The deck slab of each bridge had to incorporate two lanes for traffic, a bike path and a sidewalk, resulting in a width of about 16.0 m. The river navigability had to be upheld during the entire construction process; therefore, the area of 8.0 m above high water level over a river-width of 100 m had to be kept unobstructed.

The construction process with prefabricated elements differs in many aspects from any conventional construction method due to the fact that the building phases strongly influence the designing, planning as well as the calculation process. One of the first steps of the design process was the adaptation of the cross-sections. The height of the standard cross-section came to 3.40 m, enlarging to 6.00 m over the pier, and the width was widened, in comparison to the large scale test specimens, to 7.50 m, leaving the cantilevers on both sides to 4.0 m, see Figure 5. The total span of 407.0 m was divided into 6 spans with a main span length of 107.0 m.

The alteration of the cross-section went hand in hand with the planning and calculations of the construction phases. The girders of the two bridges would be built in nine construction phases, whereas the first three phases would be constructed using formwork and the remaining six phases using the box-sectioned bridge girders. The construction procedure is shown in Figure 6.

Fig. 4: Lightweight box-sectioned precast bridge girder

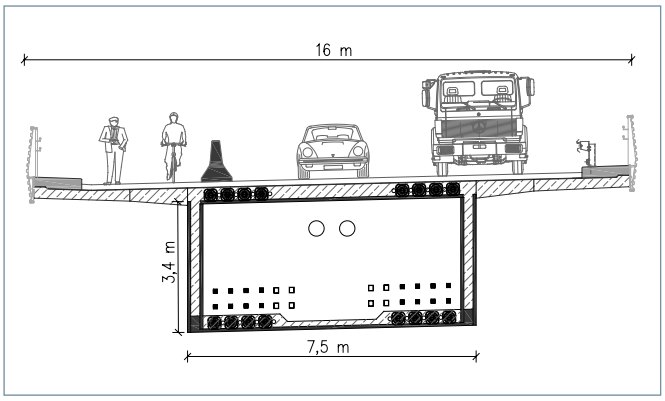

Fig. 5: Standard cross-section for the bypass bridges over the Danube River in Linz. Lightweight box-sectioned bridge girders out of hollow wall elements and ultra-thin precast elements shown in dark grey [4]

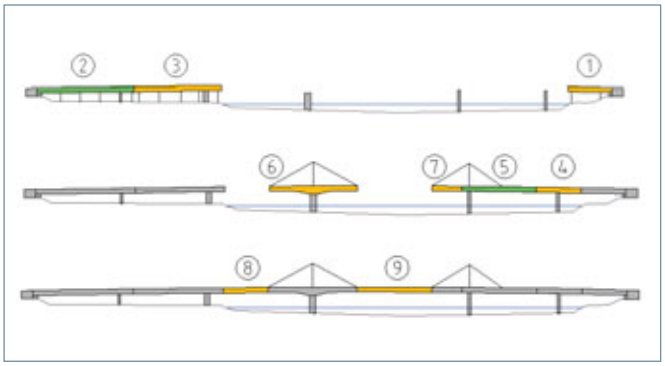

Fig. 6: The nine construction phases for the bypass bridges [3]

All construction phases above the Danube River would be built using the precast box-sectioned bridge girders. The girder sections, with lengths between 20.5 m and 60.4 m and weights between 140 t and 440 t, would be assembled near the construction site and then subsequently transported to the site by ship and lifted into position using a crane.

After the mounting of each precast box- sectioned girder, the webs (hollow wall elements) would be filled with in-situ concrete. The posttensioning cables and the ducts for the transverse posttensioning of the deck slab would be installed before the concrete would be cast. The filling with in-situ concrete of the entire mounted lightweight box-sectioned girders would take place before the following construction phase would begin.

In order to place the last three sections of the bridge (construction phases 7, 8 and 9) additional auxiliary piers with stay cables would be installed. Once all the lightweight box-sectioned girders were filled with in-situ concrete, the cantilevers of sections 4 - 9 would be cast.

Visualizations of the two bypass bridges for the Voest Bridge are shown in Figures 7 and 8. Even though the results of the design competition of the bypass bridges for the Voest Bridge did not go in favour of the design using lightweight bridge girder, the entire design and planning process showed that this building technique is not to be overlooked.

Fig. 7 and 8: Visualization of the Voest Bridge and the two bypass bridges [4]

Outlook

Based on the results of the research obtained so far it could be shown that the manufacture of trough-shaped and box-sectioned precast girders, using precast floor slabs and double-walled elements, is technically possible and represents a cost-efficient alternative to the ordinary erection methods for bridges and civil engineering structures. Compared to steel-girders, considerable cost-savings can be gained with similar lifting weights during erection. Compared to ordinary concrete girders, considerable time-savings on site can be gained considering the high amount of prefabrication. With these attributes in mind it is sure to say that that this building technique can compete with ordinary methods on many levels.

Acknowledgements

The financial support by Österreichische Forschungsförderungsgesellschaft (FFG), bmvit, ASFINAG, ÖBB and VÖB is gratefully acknowledged. Furthermore we would like to thank FCP – Fritsch, Chiari & Partner ZT GmbH inviting us to join them in the design competition of the bypass bridges for the Voest Bridge over the Danube River in Linz, as well as Franz Oberndorfer GmbH & Co KG for the good cooperation during the construction of the large-scale test structures in Gars am Kamp.

References

[1] Kollegger, J., Foremniak, S., Suza, D., Wimmer, D. & Gmainer S.: Building Bridges using the balanced lift method, Structural Concrete, Vol. 17, No. 4, pp. 281-291, 2014

[2] Wimmer, D.: Entwicklung eines neuen Brückenbauverfahrens durch die Kombination von dünnwandigen Betonfertigteilen und Vorpsannung, Dissertation, TU Wien, 2015

[3] Hausleitner, K.: Bypass-Brücken zur Voestbrücke über die Donau – Entwurf einer Betonbrücke unter Verwendung von dünnwandigen Betonfertigteilen, Diplomarbeit, TU Wien, 2014

[4] FCP – Fritsch, Chiari & Partner ZT GmbH: A7 „Bypass"-Brücken zur Voestbrücke über die Donau – Technischer Bericht. Anonyme Einreichdokumente für den Entwurfswettbewerb: A7 „Bypass"-Brücken zur Voestbrücke über die Donau, ASFINAG, 2014