A NOVEL CHARACTERIZATION METHOD FOR THERMAL THIN-FILM PROPERTIES APPLIED TO PECVD SILICON NITRIDE

R. Beigelbeck[1], F. Kohl[1], J. Kuntner[2], F. Keplinger[2], and B. Jakoby[3]
[1]Research Unit for Integrated Sensor Systems, Austrian Academy of Sciences
A-2700 Wiener Neustadt, AUSTRIA
[2]Institute of Sensor and Actuator Systems, Vienna University of Technology
A-1040 Vienna, AUSTRIA
[3]Institute for Microelectronics, Johannes Kepler University Linz
A-4040 Linz, AUSTRIA

Abstract: We devised a novel method to determine the thermal conductivity as well as the heat capacity of thin-films based on a micromachined cantilever device. In our contribution, we describe the theoretical background and a practical verification by means of a dielectric PECVD silicon nitride thin-film.

Motivation: The design, simulation, and optimization of micromachined sensor devices often require the accurate knowledge of thermal thin-film properties (conductivity λ and heat capacity c_p), e.g., for PECVD-Si_3N_4. These thermal parameters can differ considerably from those stated for bulk material and they are typically process-dependent [1].

Measurement Device and Fabrication: The measurement device consists of a micromachined cantilever made of the thin-film material to be analyzed (Figure 1 and 2). A resistive chromium heater line (H) is placed near the tip of the cantilever. Using finite element analysis, the line-width is carefully designed in order to achieve a uniform temperature profile along the cantilever's width w (Figure 3). Between the heater and the clamped end of the cantilever, two spatially separated highly sensitive thermistors made of amorphous germanium (CT1 and CT2 with a TCR of -1.8 %/K) are located. An additional thermistor (ST) is placed at the base of the cantilever providing the temperature of the bulk substrate. The connecting leads to the heater and the thermistors (ST1/ST2) are spatially separated from the sensor region by means of lateral arms (A) to minimize their influence in terms of thermal shunts (The associated remaining spurious heat paths can still be considered in the derivation of the thermal thin-film parameters from the measurement data.). The detailed process used in the fabrication of the PECVD-Si_3N_4-test-structure (Figure 3) is described in [2].

Measurement Method: Inducing a temperature unit-step in the heater leads to transient heat propagation in the cantilever. If the spurious heat conduction to the surrounding environment is negligible, which can be, e.g., achieved by carrying out the measurement in a vacuum chamber, the heat transfer between H and ST1/ST2 is mainly given by the heat conduction in the thin-film. In our analysis, the heat flow through the connecting arms and the radiated heat along the structure are also considered. Due to the almost uniform temperature distribution across w, the problem can be modeled as a 1D heat transfer problem (describable in terms of coupled partial differential equations of first order), which can be solved analytically by means of the Laplace transform (case $\{i\}$, Figure 4b). In the case of negligible heat loss through the arms (case $\{ii\}$, Figure 4a), the problem reduces to a single partial differential equation allowing a much simpler treatment. For this case, we showed that the following measurement procedure can be derived:

1. Measure the steady-state excess temperatures ($t\to\infty$) at both thermistor locations ($\Delta T_{CT1}(\infty)$ at $x = x_1$ and $\Delta T_{CT2}(\infty)$ at $x = x_2$).
2. Determine the coefficient ζ by solving the equation
$$\frac{\Delta T_{CT1}(\infty)}{\Delta T_{CT2}(\infty)} = \frac{\sinh[\sqrt{\zeta}(L - x_1)]}{\sinh[\sqrt{\zeta}(L - x_2)]}. \quad (1)$$
3. Calculate the thermal conductivity λ from
$$\lambda = \frac{P}{wd\Delta T_{CT2}(\infty)\sqrt{\zeta}} \frac{\sinh[\sqrt{\zeta}(L - x_2)]}{\cosh(\sqrt{\zeta}L)}, \quad (2)$$
where P is the applied heating power.
4. The heat capacity can then be deduced from the point of inflection t_p of the transient characteristics $\Delta T_{CT2}(t)$ and the density ρ of the thin-film to
$$c_p \approx \frac{t_p \lambda (1 + \sqrt{1 + 4\zeta x_2^2})}{x_2^2 \rho}. \quad (3)$$

In case $\{i\}$, λ and c_p can be gained from the solution of a nonlinear system of two equations.

Measurement Setup and Results: To measure the transients $\Delta T_{CT1}(t)$ and $\Delta T_{CT2}(t)$ required for the extraction of the thermal thin-film properties, a PC with a data acquisition board was used in combination with additional interface electronics (Figure 5). Sample measurement results for three cantilevers featuring different widths are show in Figure 6. From these characteristics we obtain $\lambda \approx 1.23$ W/(K·m) and $c_p \approx 661$ J/(kg·K) for a PECVD-Si_3N_4-test-structure.

Word Count: 596

References:

[1] M. von Arx, O. Paul, H. Baltes, *Journal of Mems*, 9 (2000), pp. 136-145.
[2] J. Kuntner, A. Jachimowicz, F. Kohl, and B. Jakoby, "Determining the thin-film thermal conductivity of low temp. PECVD Si_3N_4", in *Proc. of the Eurosensors'06 Conference*, Goteborg, Sweden, Sept. 17-20, 2006.

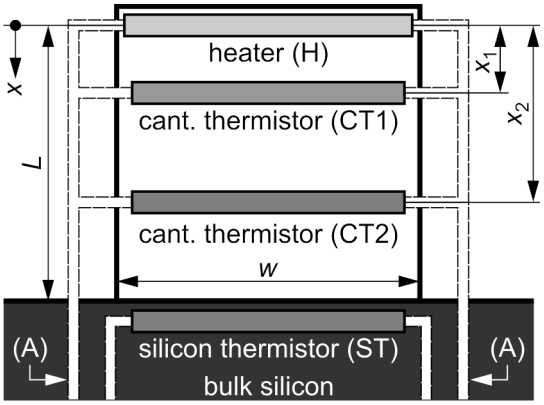

Figure 1. Schematic view of the considered micromachined cantilever structure (length L, width w, and thickness d; d<<L and d<<w) for the determination of the thermal properties of the thin-film cantilever material. The distances between the heater H and the temperature sensors CT1 and CT2 are given by x_1 and x_2, respectively. The connecting leads to H, CT1, and CT2 are carried by lateral arms (A). Depending on the design, it is possible to combine arms as shown in Figure 3 for those of H and CT1.

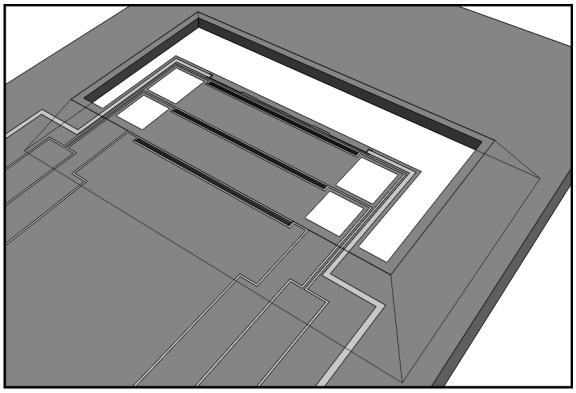

Figure 2. Schematic 3D view of a fabricated thin-film cantilever. In this case, CT1 is placed near the heater to provide the ability to measure directly the induced temperature by the heater.

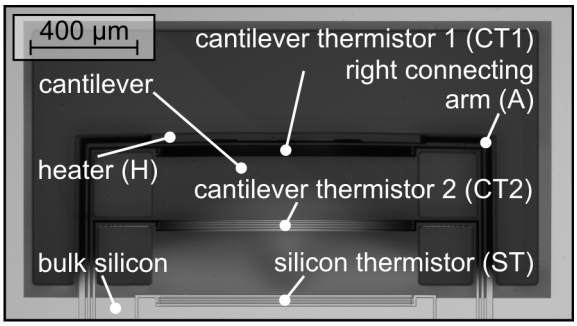

Figure 3. Photomicrograph of a fabricated cantilever made of PECVD-Si_3N_4. The optimized heater structure to ensure a nearly uniform temperature distribution across the width w can be seen in this picture.

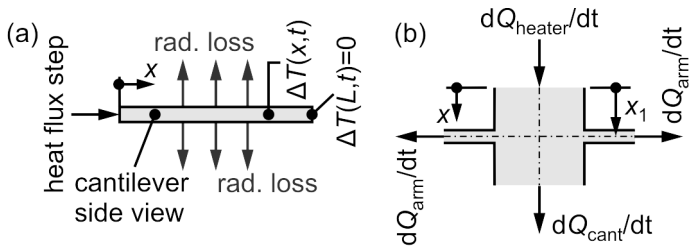

Figure 4. (a) 1D-Model to analyze case {ii}, i.e., negligible arm influence. The solution for the temperature distribution $\Delta T(x,t)$ can be expressed in terms of an infinite sum. (b) Illustration of the method in the general case {ii} on the example of the upper (CT1) arms. The upper ($x<x_1$) and the lower ($x>x_1$) part of the cantilever as well as the arms are modeled in the same way as in case {i} resulting in three coupled 1D partial differential equations. Solving this system and incorporating the continuity of the temperature and the conservation of the heat flux dQ_i/dt at $x=x_1$ yields to the solution (expressible in terms of an infinite double series).

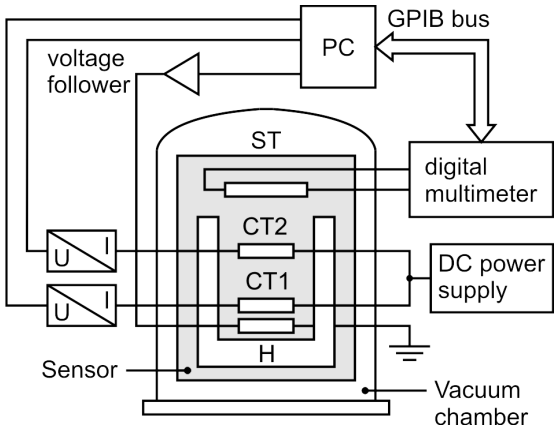

Figure 5. Measurement Setup.

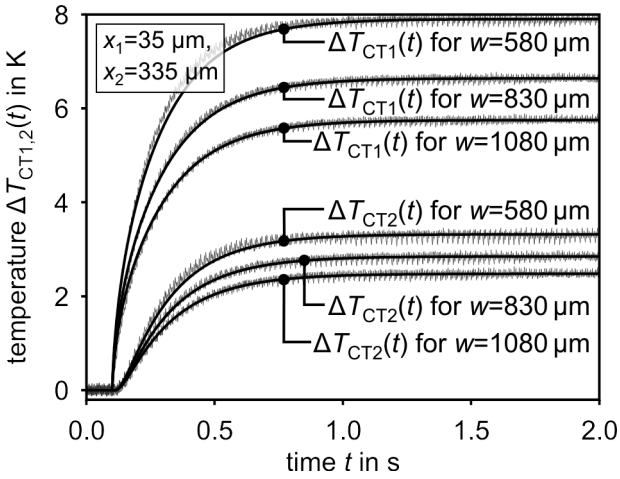

Figure 6. Measured transients $\Delta T_{CT1}(t)$ and $\Delta T_{CT2}(t)$ for three different cantilevers featuring equal length L=615 um and thickness d=1.3 µm, but different widths w (580 µm, 830 µm, or 1080 µm). The shaky lines (grayscaled) represent the measured temperature characteristics, while the plain lines reflect the temperature evolution obtained by our analytical model. Both are in very good agreement.