RFID Reader Frontends for a Dual-Frequency (13 MHz and 868 MHz) Rapid Prototyping Environment

Robert Langwieser,
Michael Fischer and
Prof. Dr. Arpad L. Scholtz

Vienna University of Technology
www.tuwien.ac.at

Institute of Communications and
Radio-Frequency Engineering
Gußhausstrasse 25/389
Vienna, 1040
Austria
www.nt.tuwien.ac.at

Christian Doppler Laboratory for
Design Methodology of
Signal Processing Algorithms
www.nt.tuwien.ac.at/cdlab

EEEfCOM 2008, Ulm

Outline

- Reader – Tag Communication
- Analog Frontends for Rapid Prototyping Environments
- HF-Frontend
- UHF-Frontend

Reader – Tag Communication

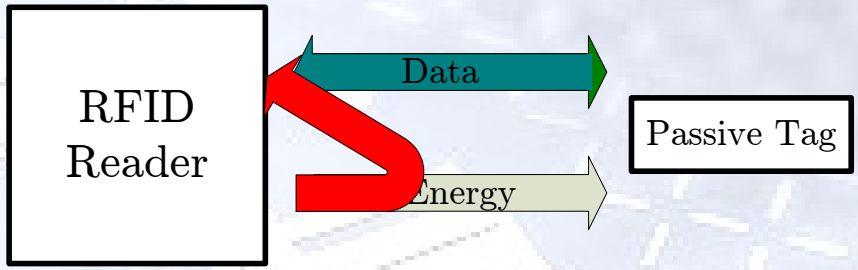

- Tag is powered by the reader
- Energy transfer from reader to tag during the entire communication
- Energy transfer happens at the carrier frequency of the data signal
- Cross talk from transmitter to receiver at the reader

Analog Frontends for a Rapid Prototyping Environment

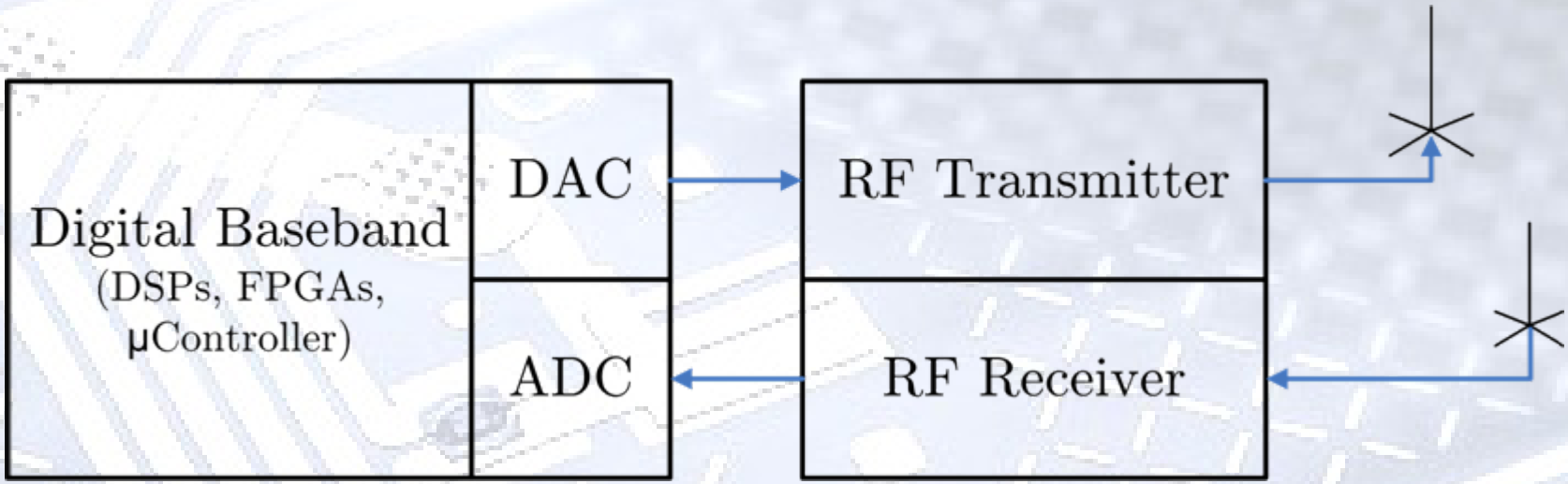

- As much functionality as possible should be realized by the digital baseband
- Frequency conversion, filtering and amplification are the tasks of the RF-frontend

HF-Frontend: Requirements

- Frequency: 13.56MHz
- Communication range: a few centimeters
- Inductive coupling between reader and tag
- Load modulation
- HF-power of 1 W
- Interface with the DSP-hardware
  - frequency: 13.56MHz
  - power levels: determined by ADCs and DACs
- Carrier to sideband ratio improvement

HF-Frontend: Carrier Suppression Principle

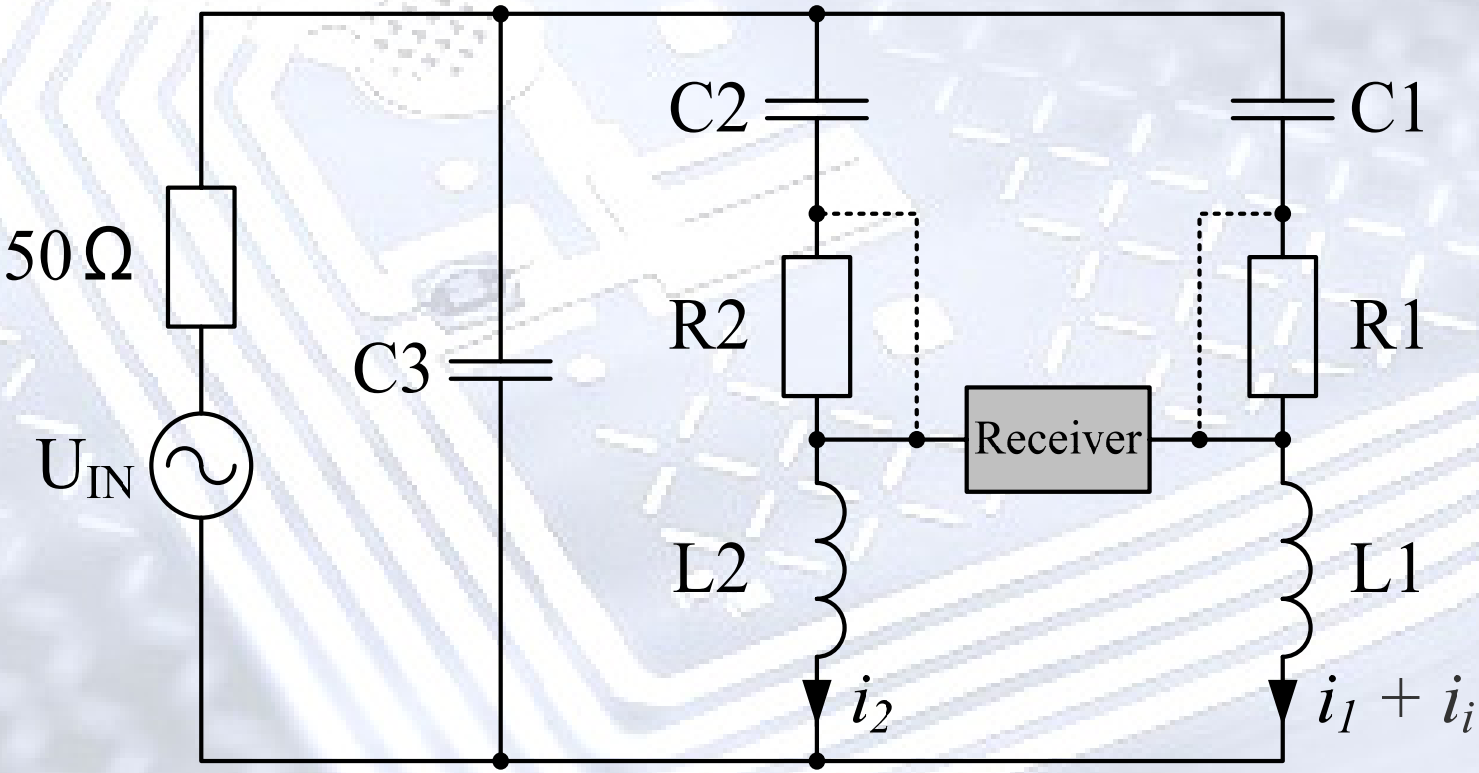

HF-Frontend with Tag-Emulator

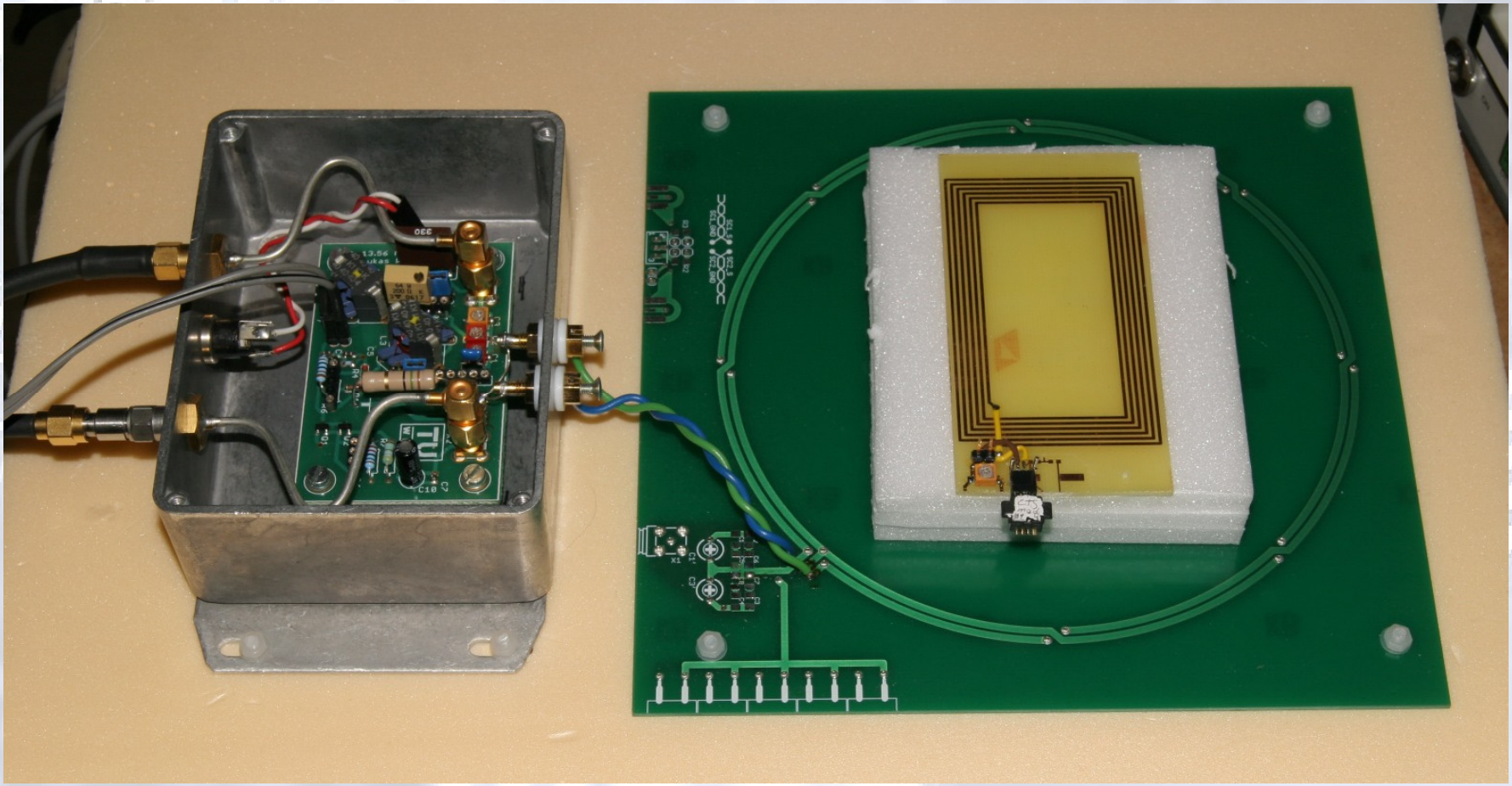

HF-Frontend: Verification

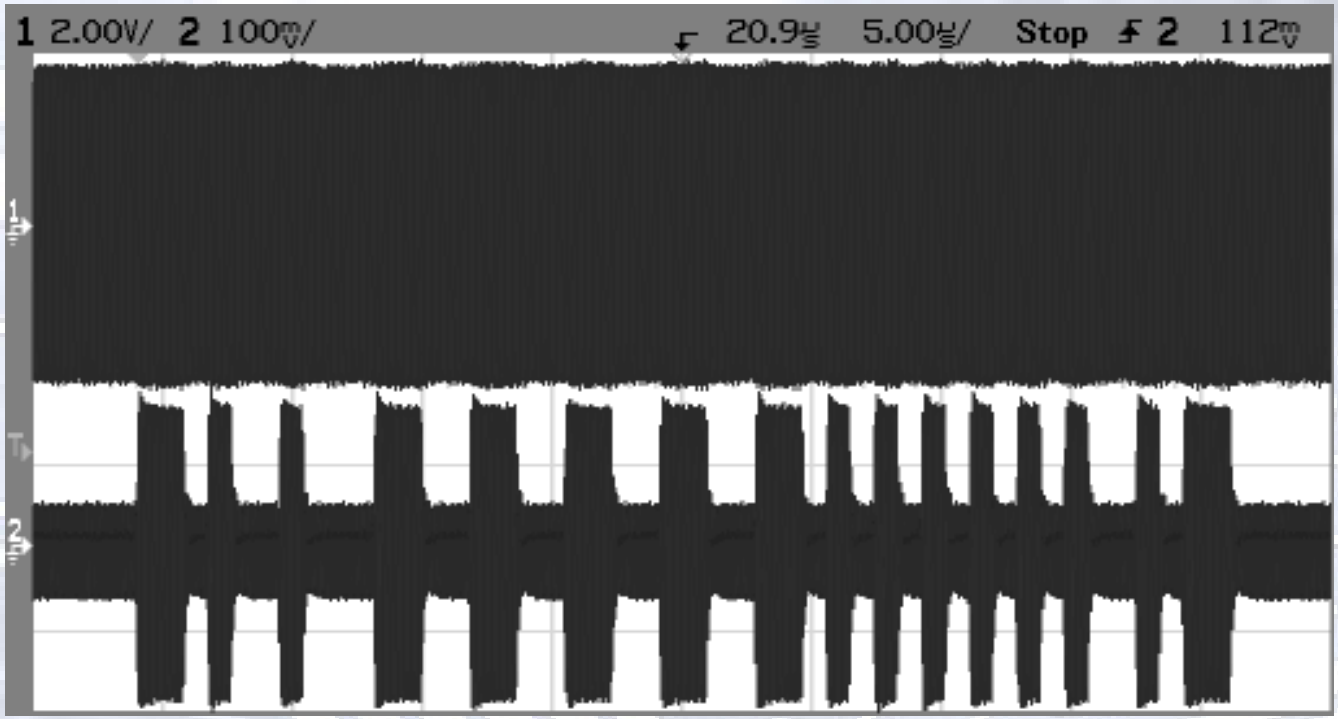

Coil Voltage

Output Voltage

- Laboratory setup with tag-emulator
- Optimal tuning
- Modulation signal enhanced by 34 dB

Measurement with Commercial Tag

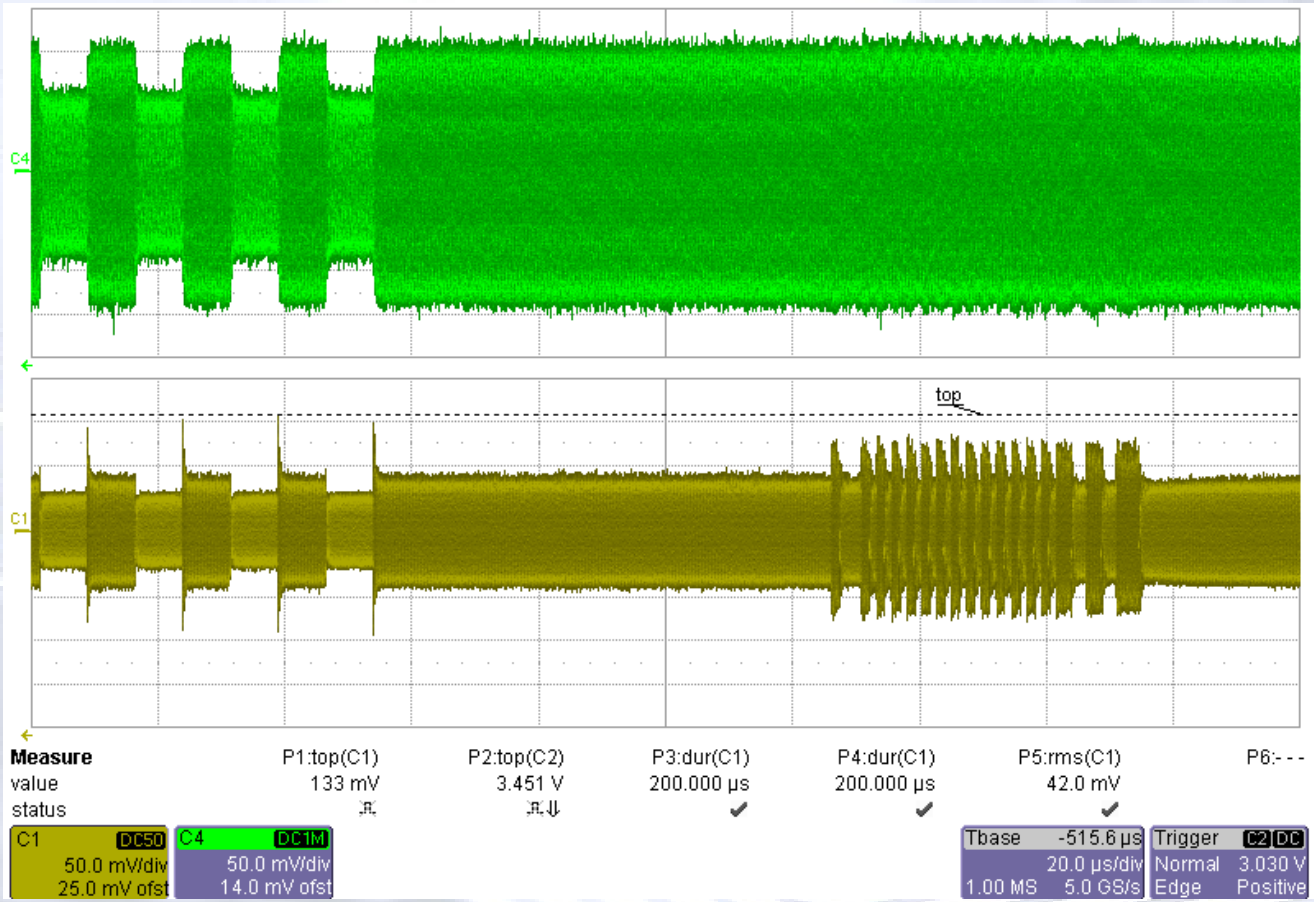

Transmit coil voltage

Carrier-suppressed output voltage of the HF-Frontend

Distance between tag and transmit coil d = 24 mm
Magnetic field at tag position (without Tag) H = 2.4 A/m

UHF-Frontend

- Requirements
- Rx/Tx crosstalk
  - Antenna configurations
  - Active Rx/Tx decoupling
- Frontend concept
- Verification measurement

Requirements

- Frequency: 865MHz - 868MHz
- Communication range: up to 10m
- 2 Watt linear output power
- Interface with the DSP-hardware
  - frequency: 867MHz not directly possible
    → frequency conversion necessary
  - power level: determined by ADCs and DACs
- Carrier to sideband ratio improvement (carrier suppression)

Separate Rx/Tx Antenna

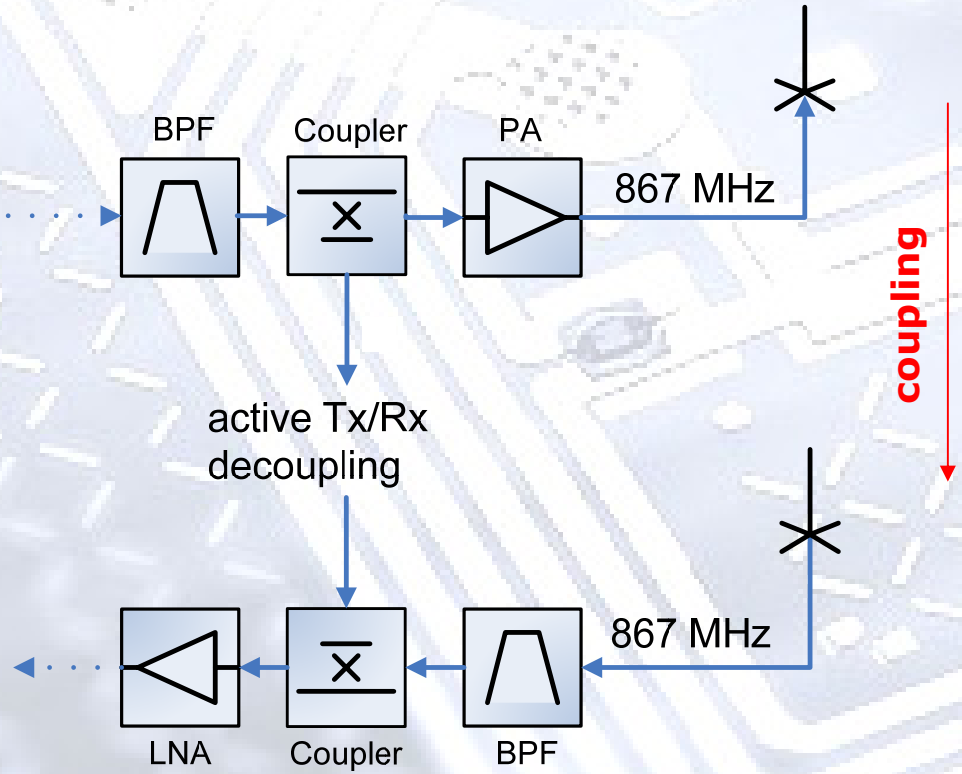

Rx/Tx isolation: 30 to 40 dB

two antennas

Rx/Tx isolation depends on:
- **antenna spacing**
- **antenna radiation pattern**

Single Rx/Tx Antenna

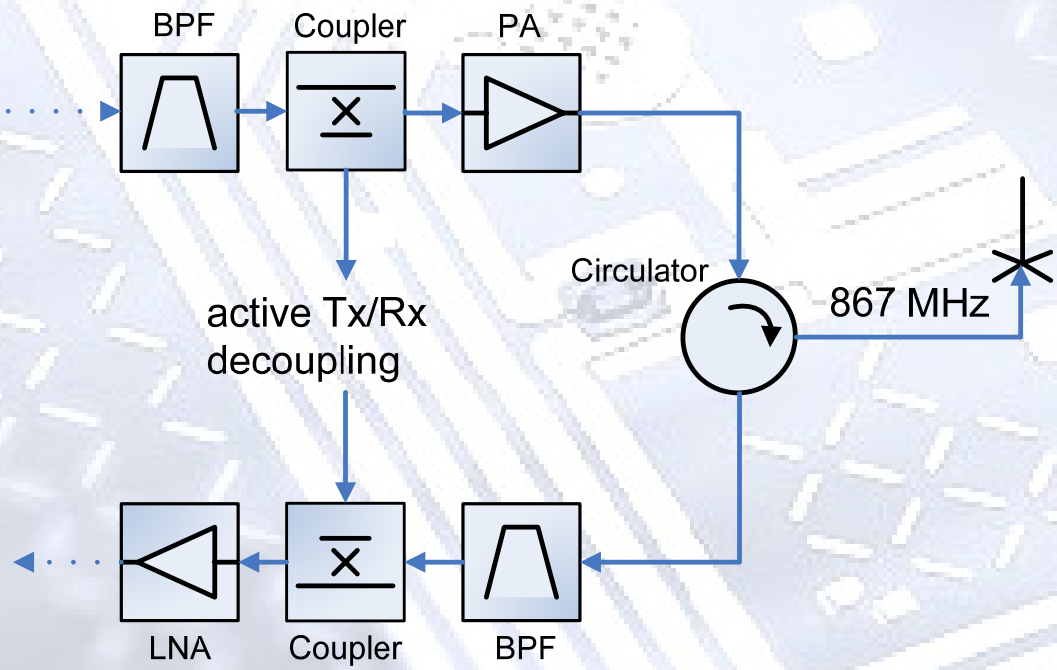

Rx/Tx isolation: 20 to 30 dB

single antenna

Rx/Tx isolation depends on:
-circulator
-return loss of antenna

circulator insertion loss: 0.4 – 1 dB

Active Rx/Tx Decoupling

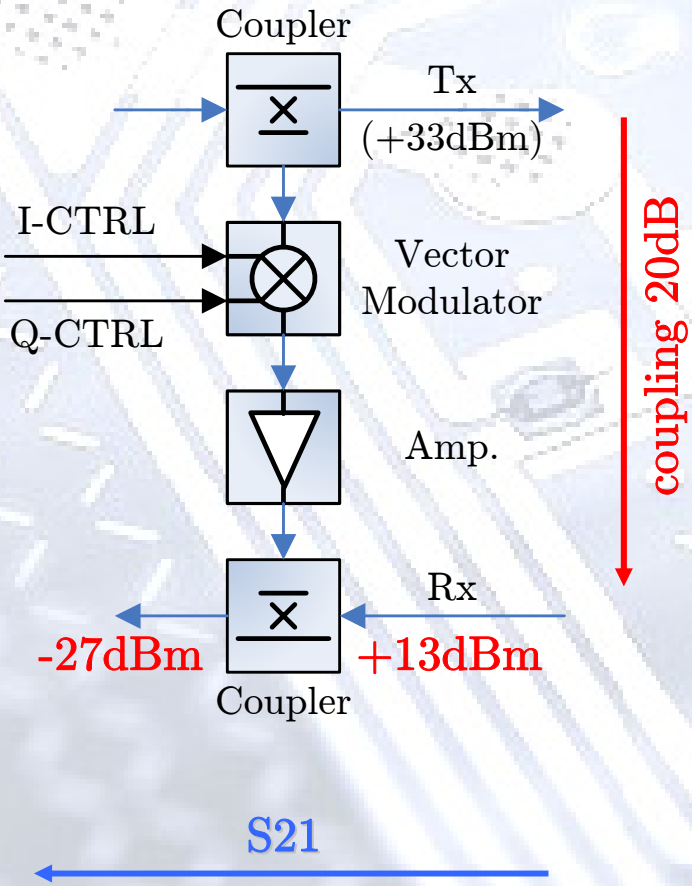

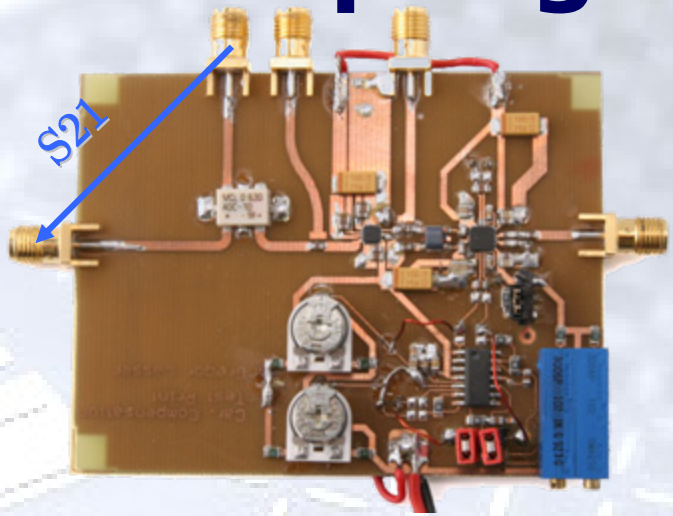

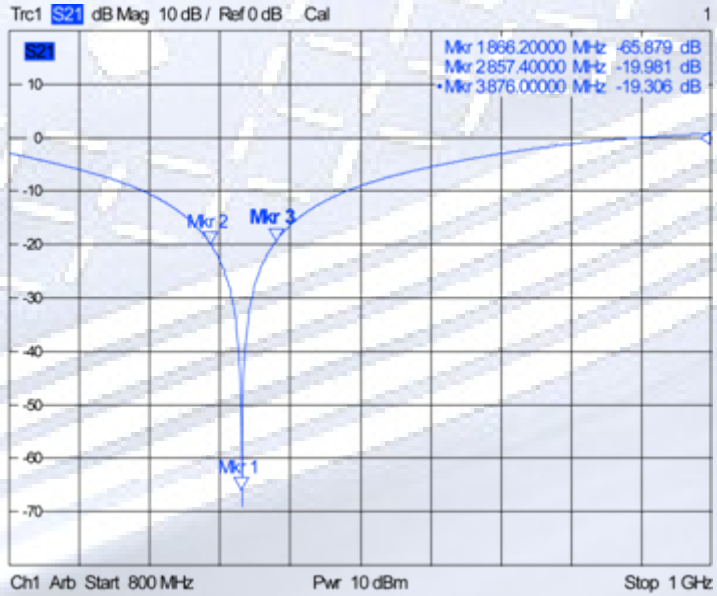

UHF Reader Frontend

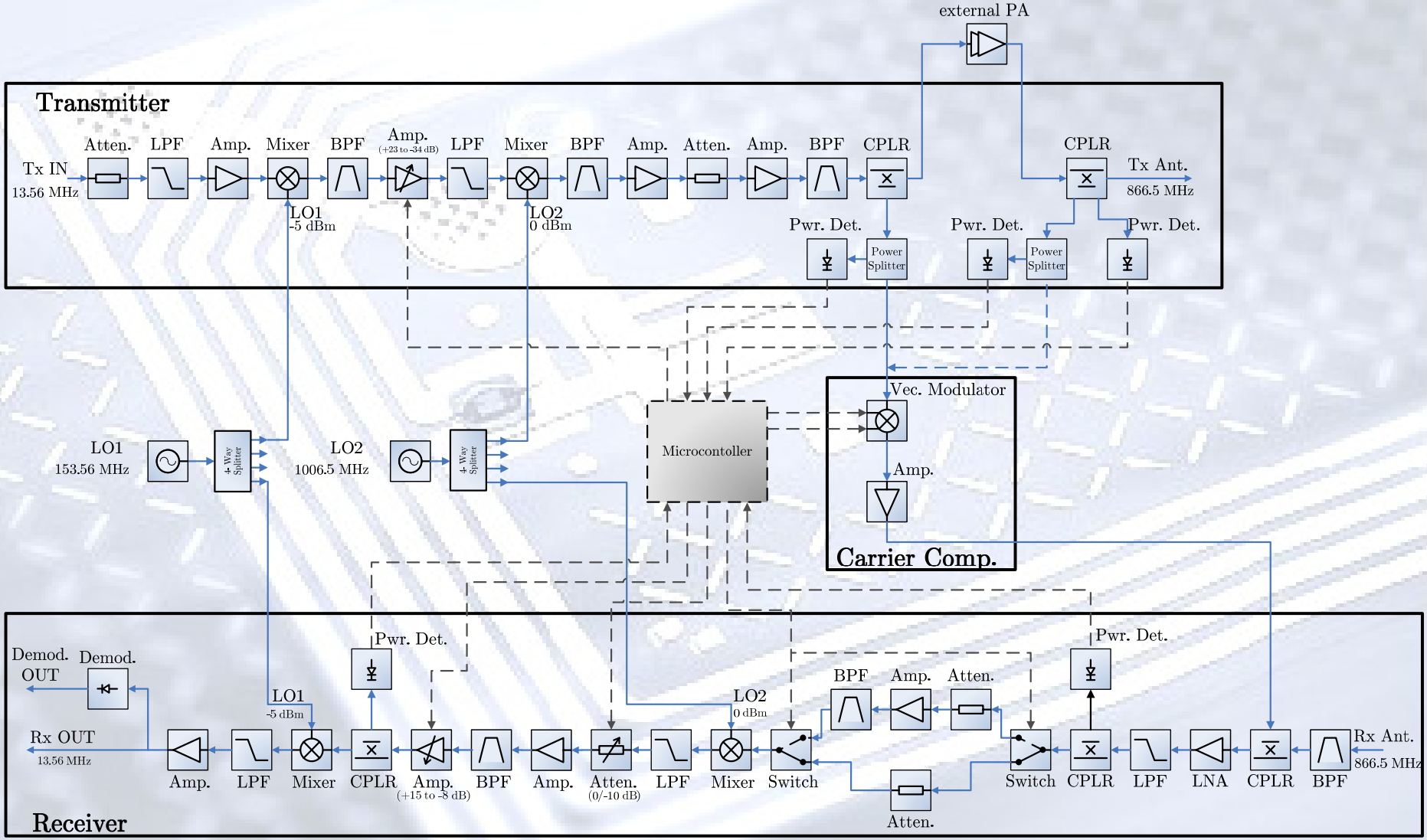

UHF Transmitter

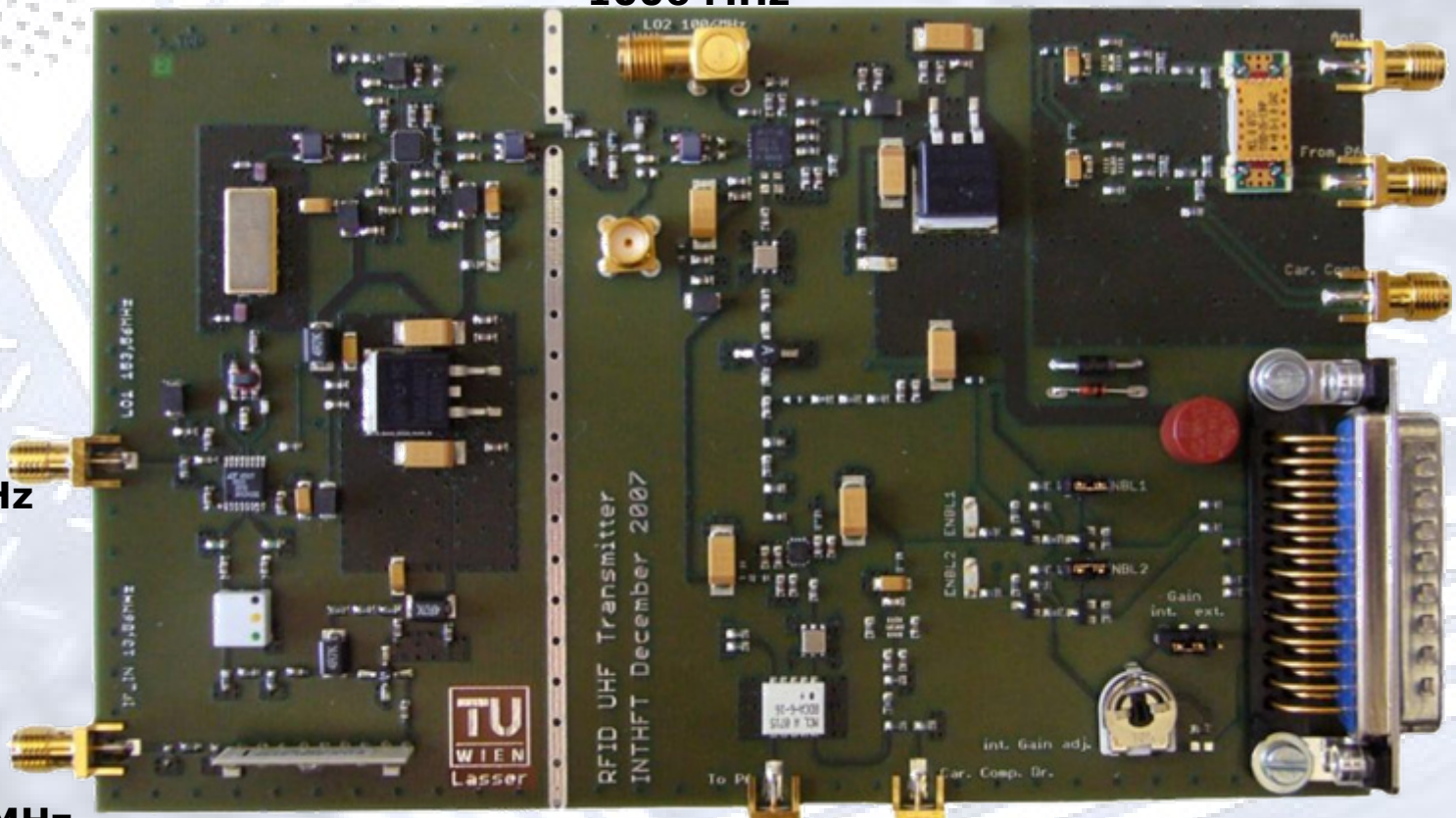

Measurement Setup

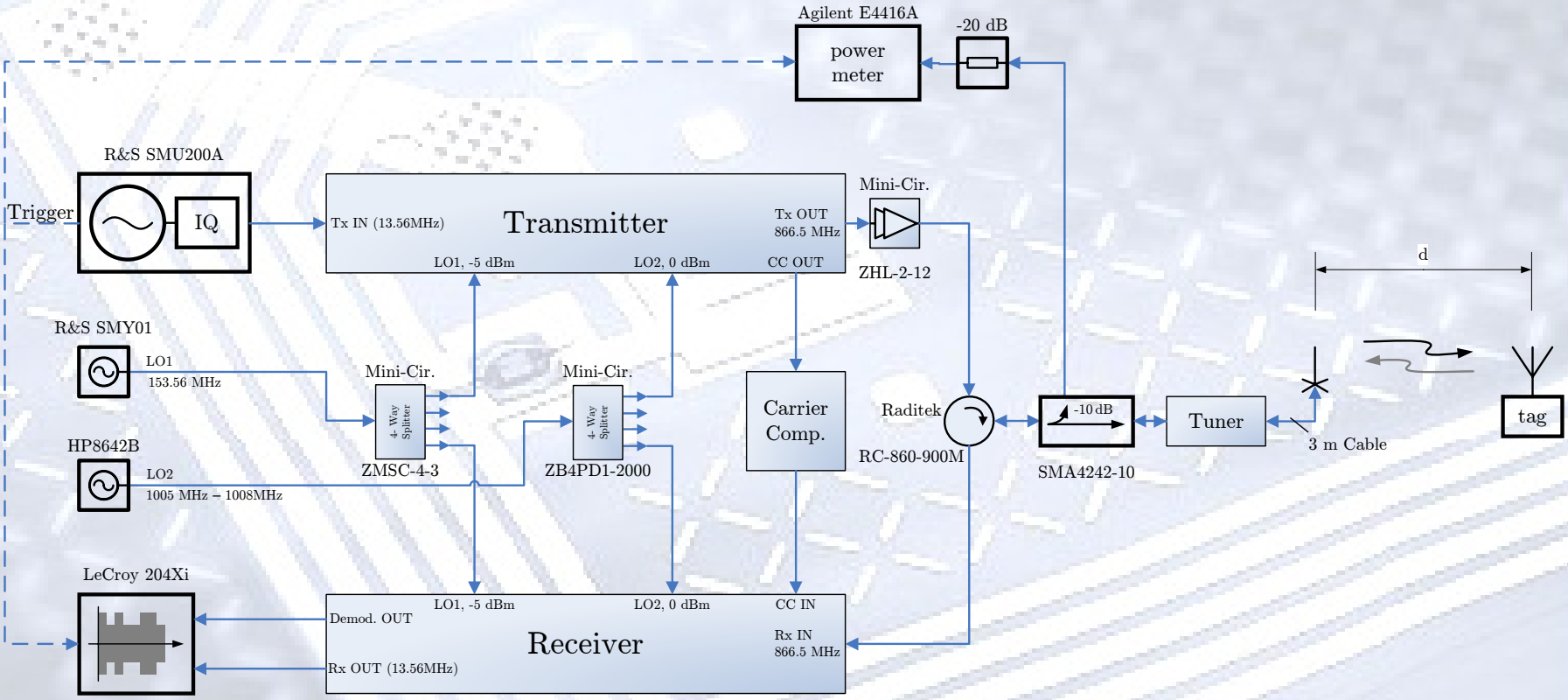

Scenario: Corridor 5th Floor

Power amplifier: Pout = 33.4 dBm

Losses (cable, coupler..): 2.75 dB

Antenna gain: ~5 dBi (~ 2.85 dBd)

Transmit power: ~ 33 dBm ERP

Received Tag Answer

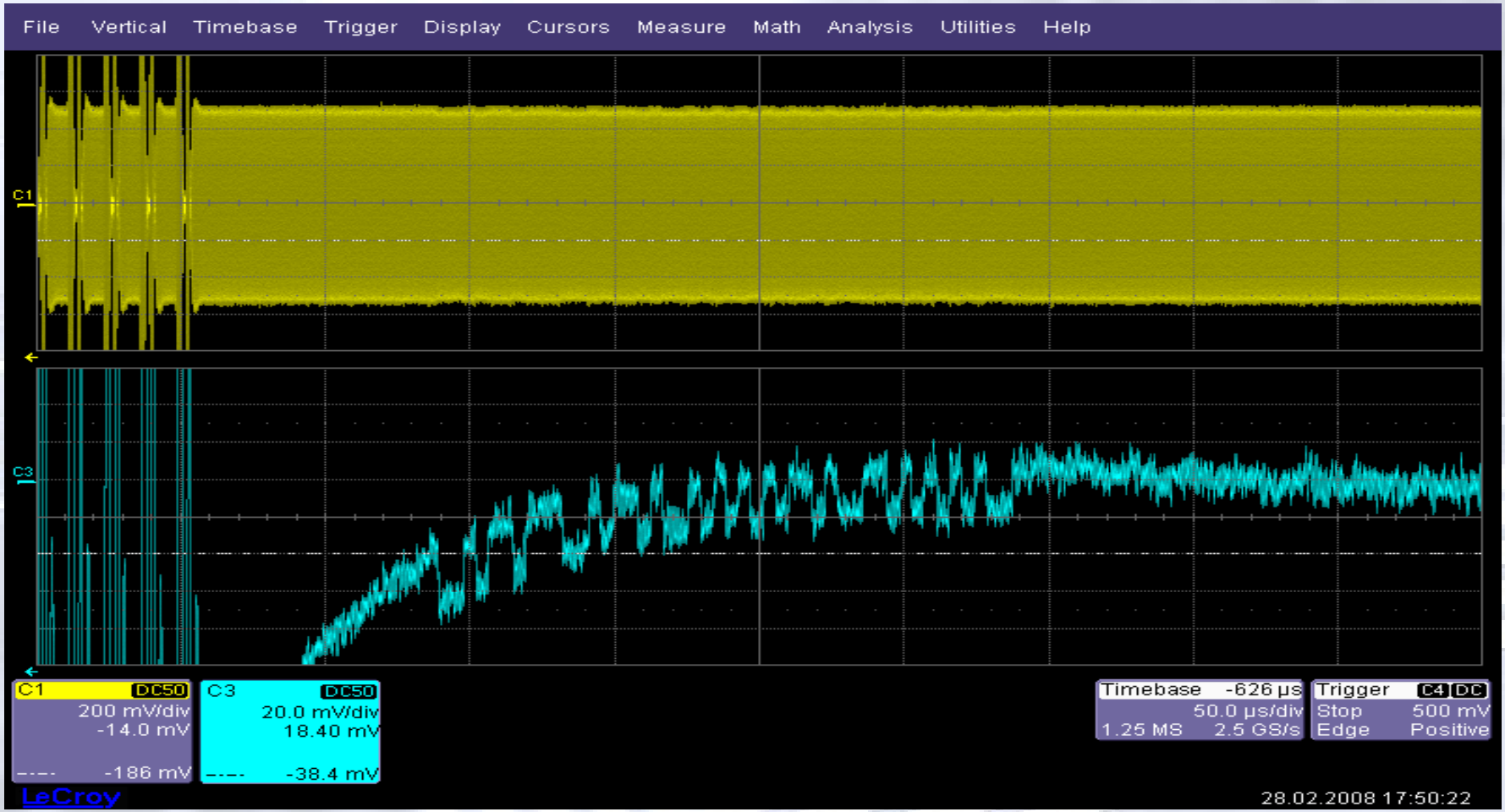

Screenshot at maximum communication range of ~11m

Summary

- Frontends for Rapid Prototyping
- Current implementations for RFID
  - HF-Frontend
    - Rx/Tx decoupling
      (34 dB carrier suppression achieved)
    - Measurements
  - UHF-Frontend
    - Rx/Tx decoupling
      (antenna configuration, vector modulator)
    - Concept and verification
      (~11m comunication distance achieved)

Thank you!