Design and Verification of a Flexible and Scalable 4x4 MIMO Testbed

Sebastian Caban, Robert Langwieser, Christian Mehlführer, Ernst Aschbacher, Werner Keim, Georg Maier, Biljana Badic, Markus Rupp, and Arpad L. Scholtz

(MIMO = Multiple Input Multiple Output)

scaban@nt.tuwien.ac.at

Table of Contents

- Motivation
- The MIMO Testbed Developed
  - Upconverters, Channel, Downconverters
  - Interfacing the Testbed via MATLAB
  - Optional DSP/FPGA Board
- Measurement Results
- Conclusion

Motivation

MIMO algorithms today are mostly tested by

- symbolical calculations
- numerical (MATLAB) simulations

Basic drawback: lack of good channel models

We need a way to verify all these algorithms by

- measurements over a real air interface

scaban@nt.tuwien.ac.at

The MIMO Testbed

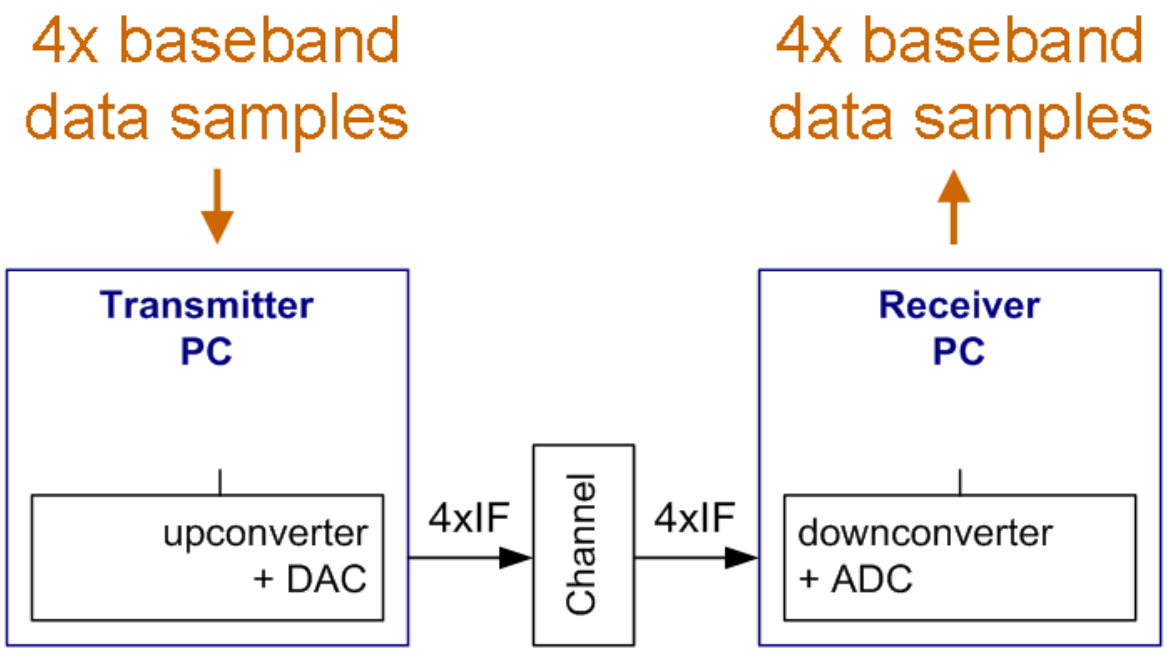

IF=Intermediate Frequency
DAC=Digital to Analog Converter ADC=Analog to Digital Converter

The MIMO Testbed

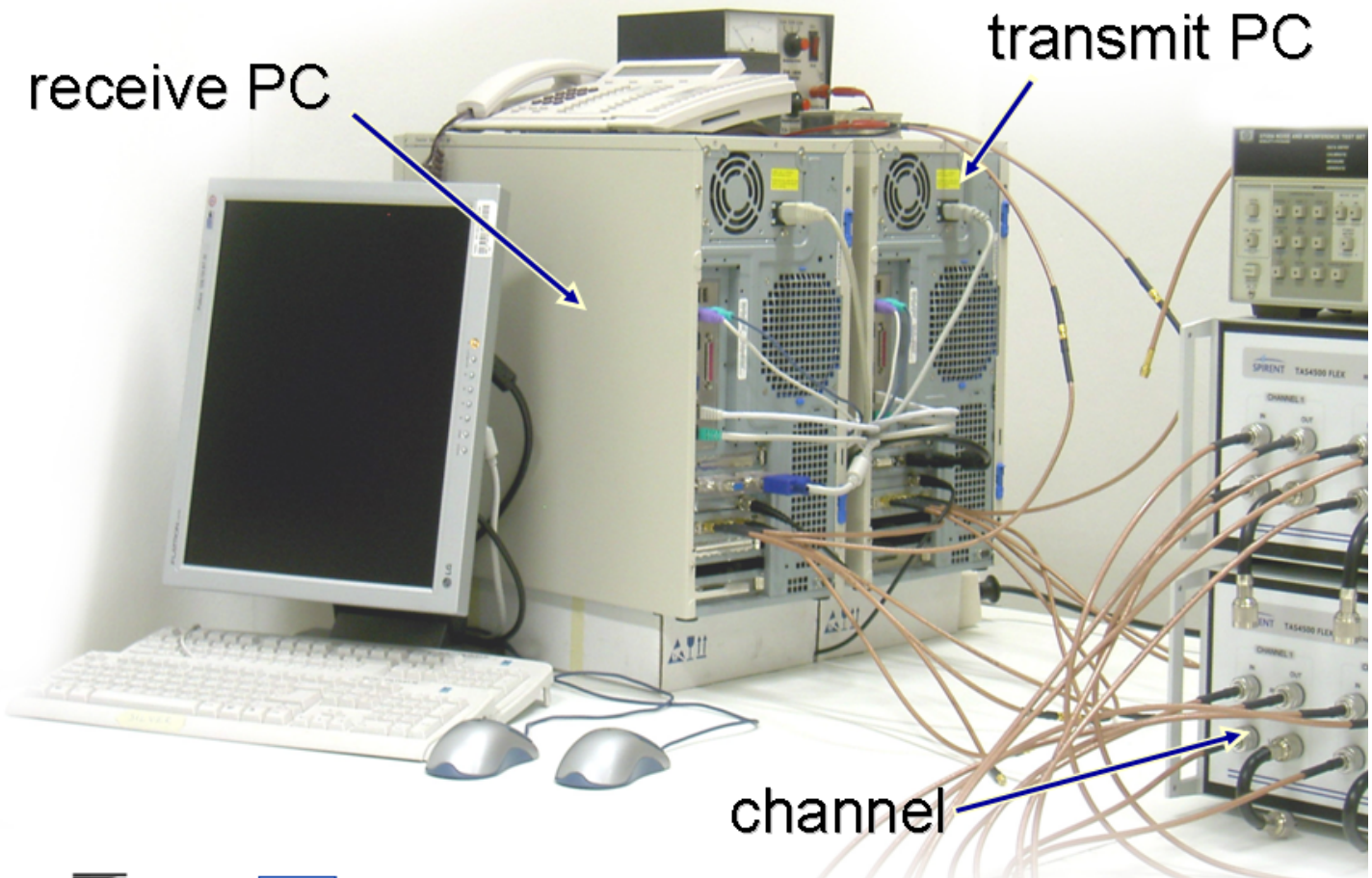

The Upconverters

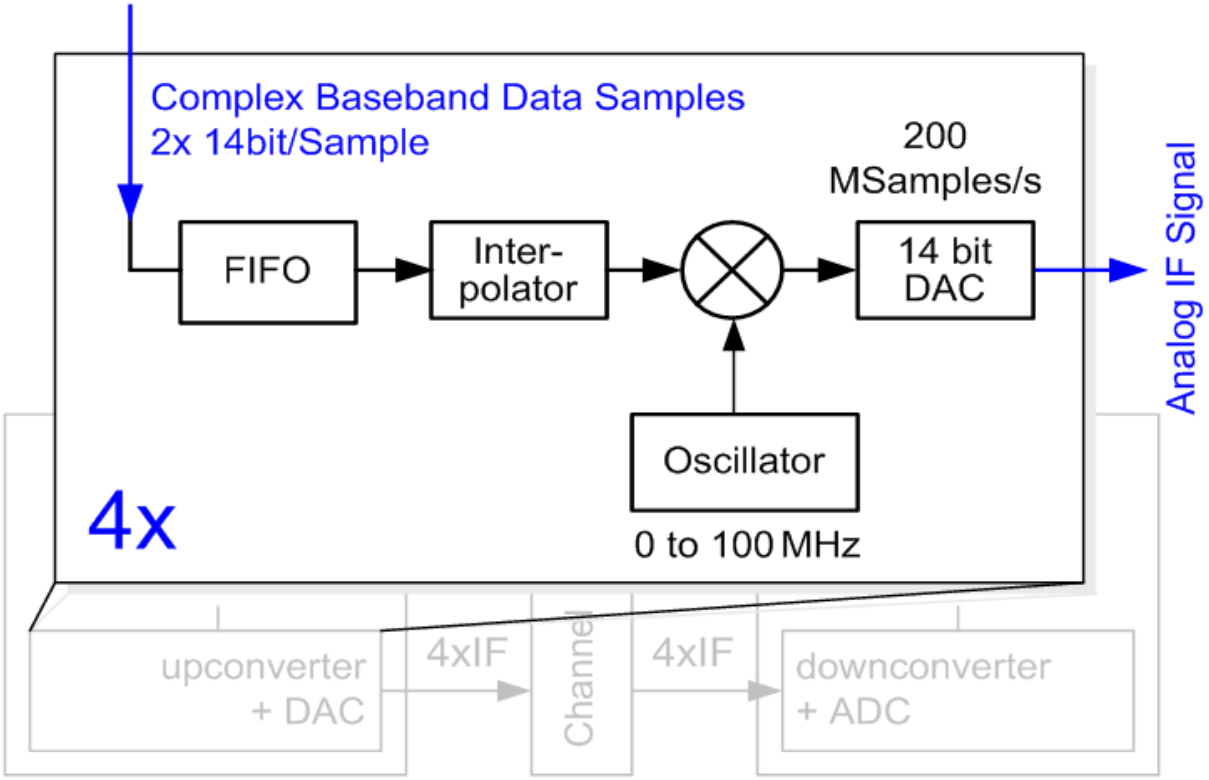

FIFO = First in First Out

The Upconverters

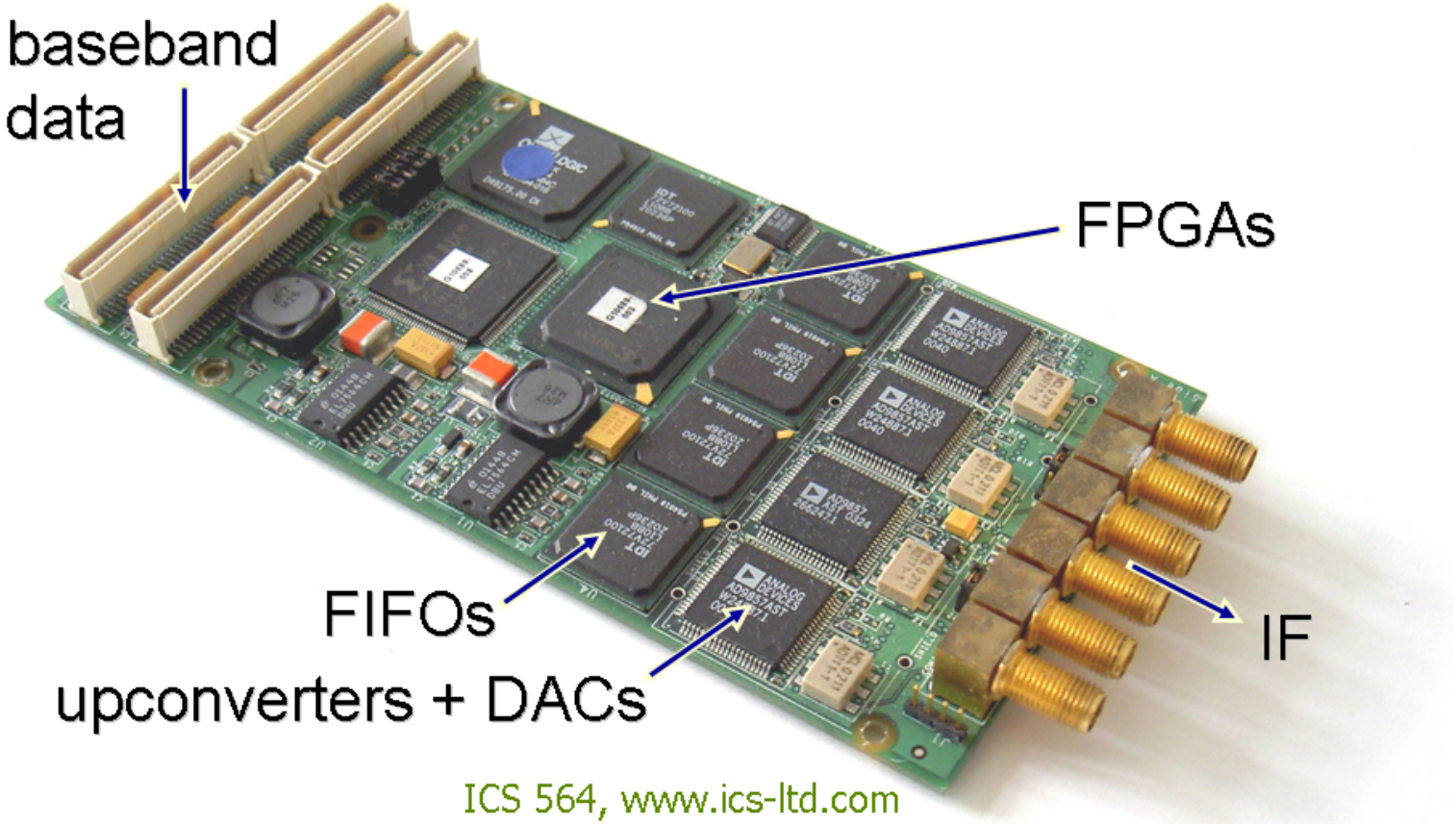

ICS 564, www.ics-ltd.com

The Channel

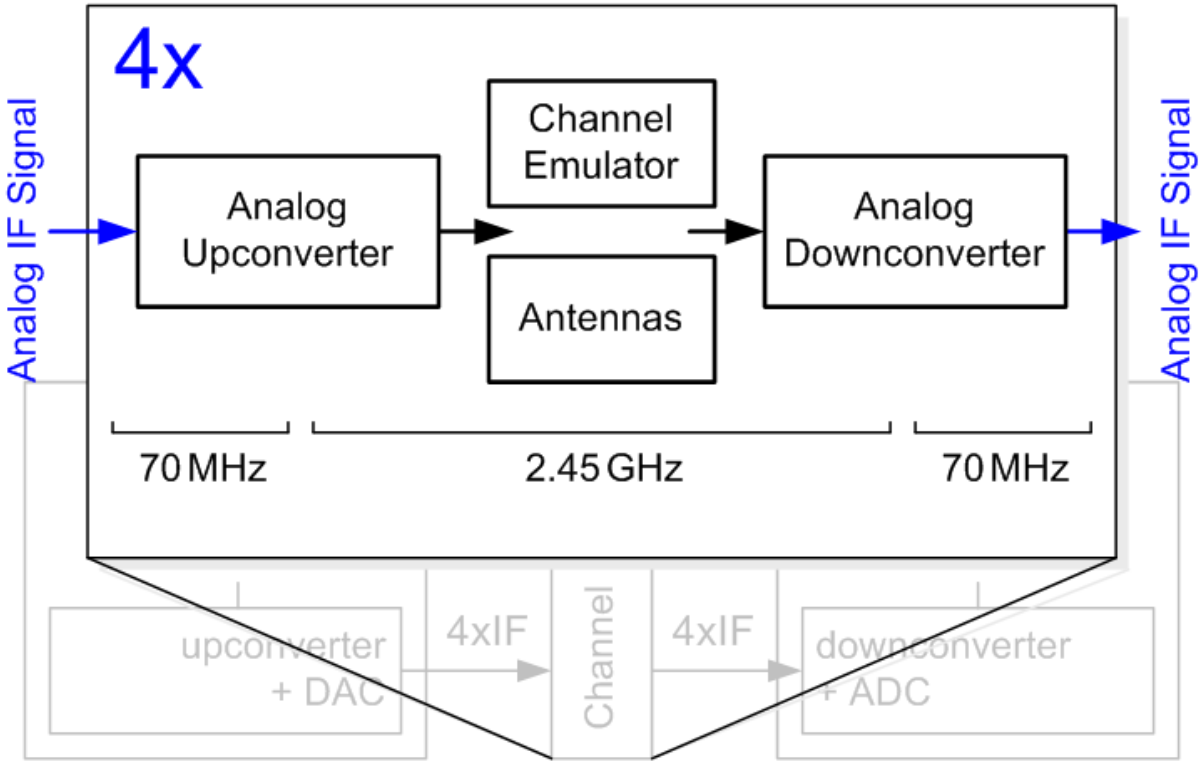
4x
Analog IF Signal
Analog Upconverter
Channel Emulator
Antennas
Analog Downconverter
Analog IF Signal
70 MHz
2.45 GHz
70 MHz
upconverter + DAC
4xIF
Channel
4xIF
downconverter + ADC

The Channel

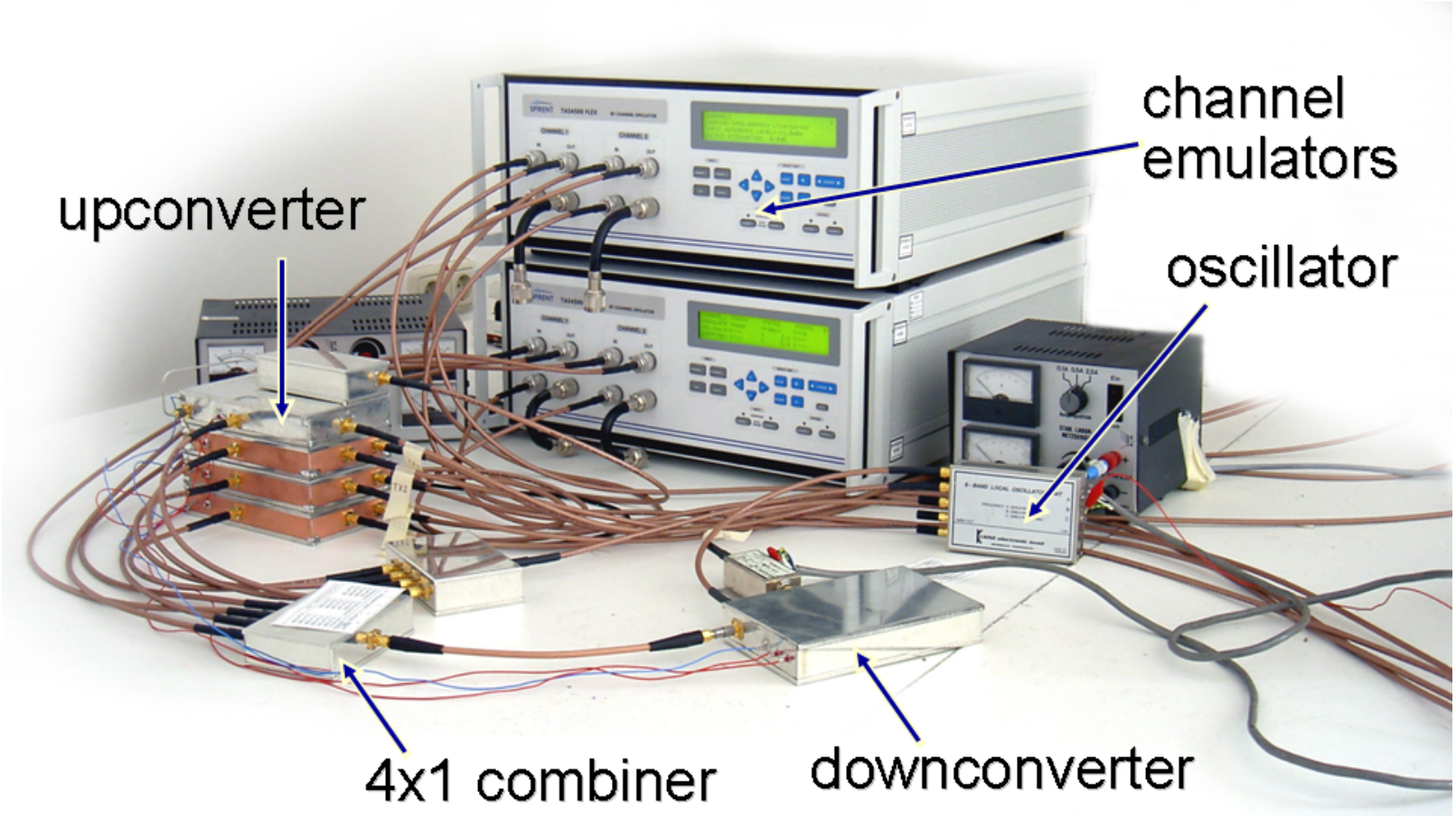
channel emulators
upconverter
oscillator
4x1 combiner
downconverter

The Downconverters

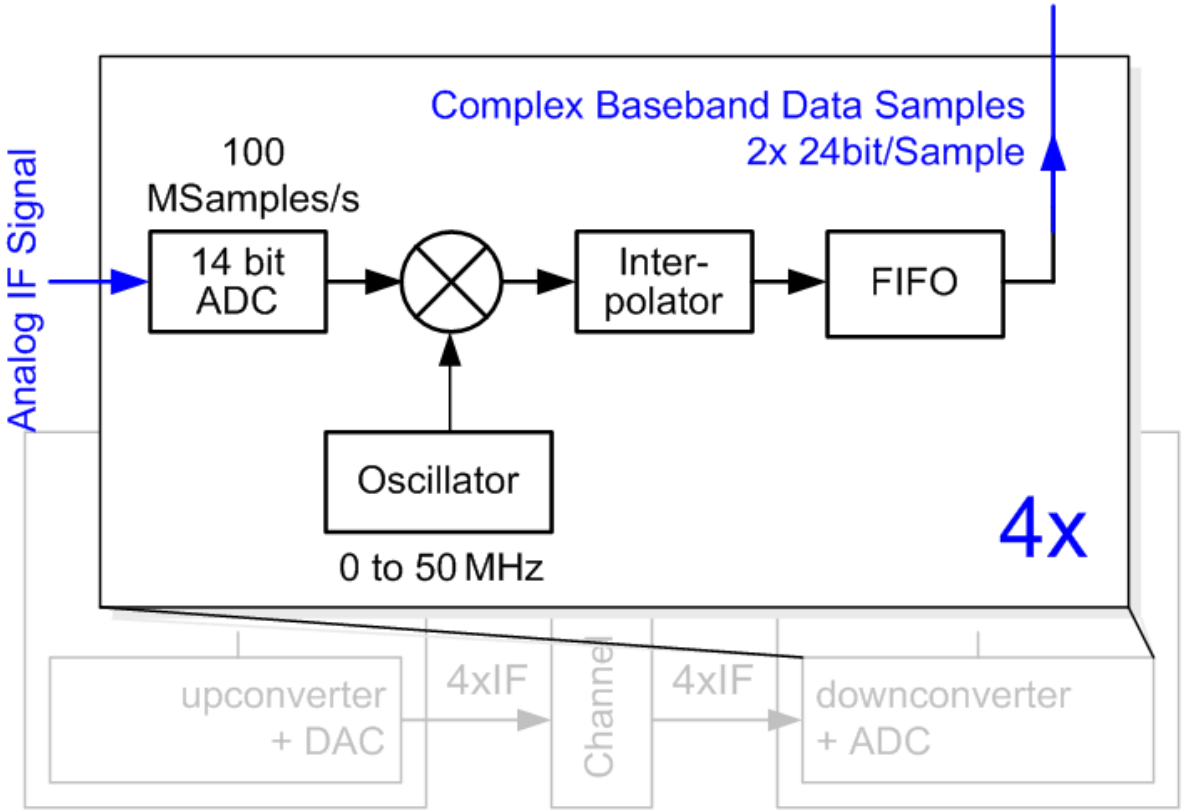

The Downconverters

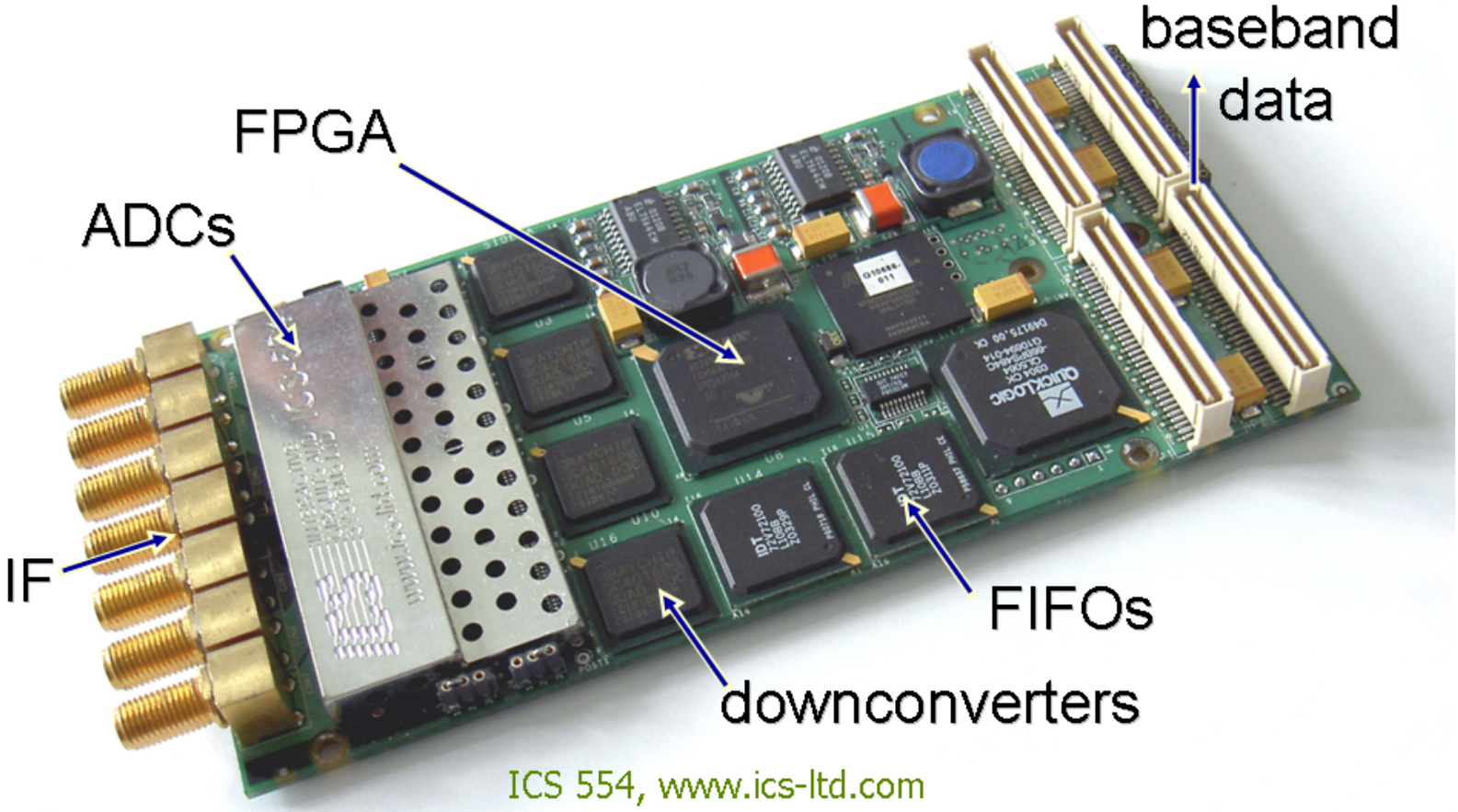

ICS 554, www.ics-ltd.com

The MIMO Testbed

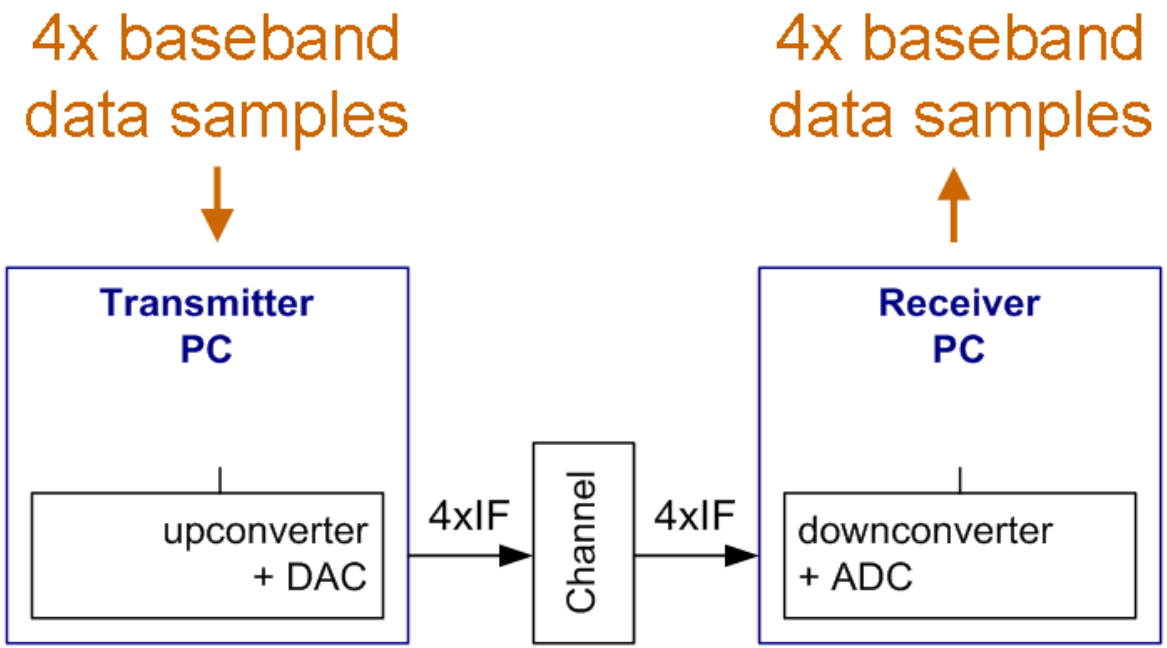

The MATLAB Interface

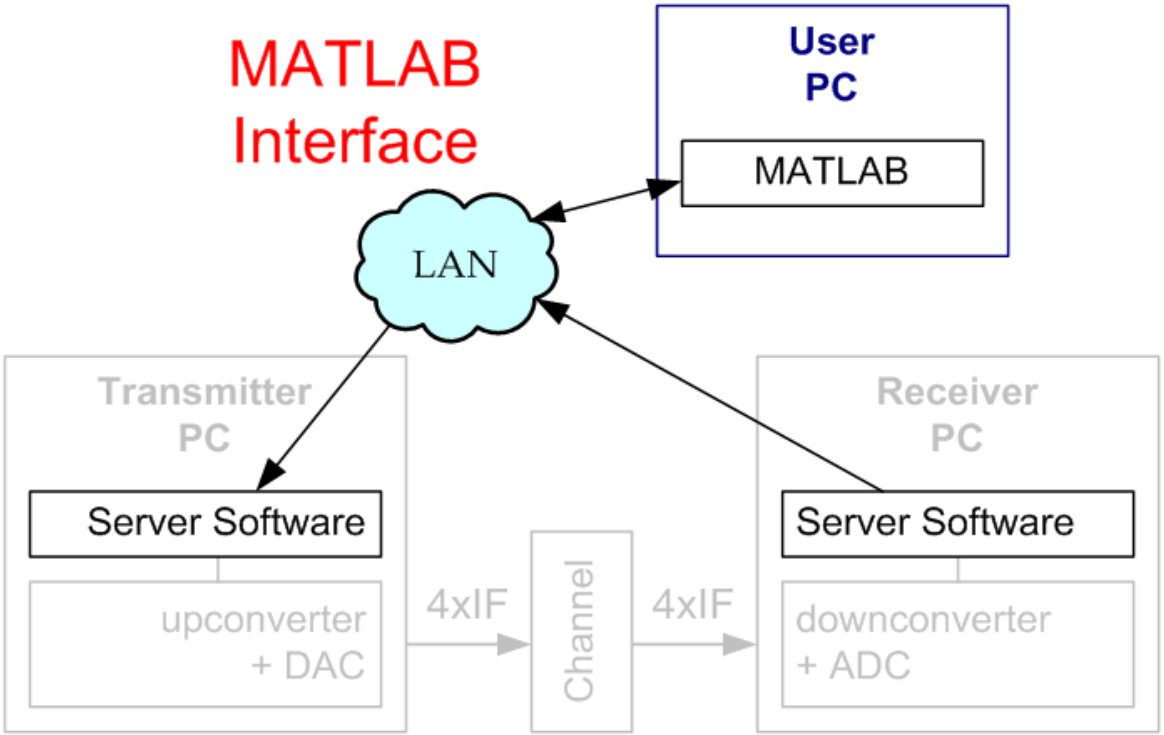

DSP+FPGA Boards

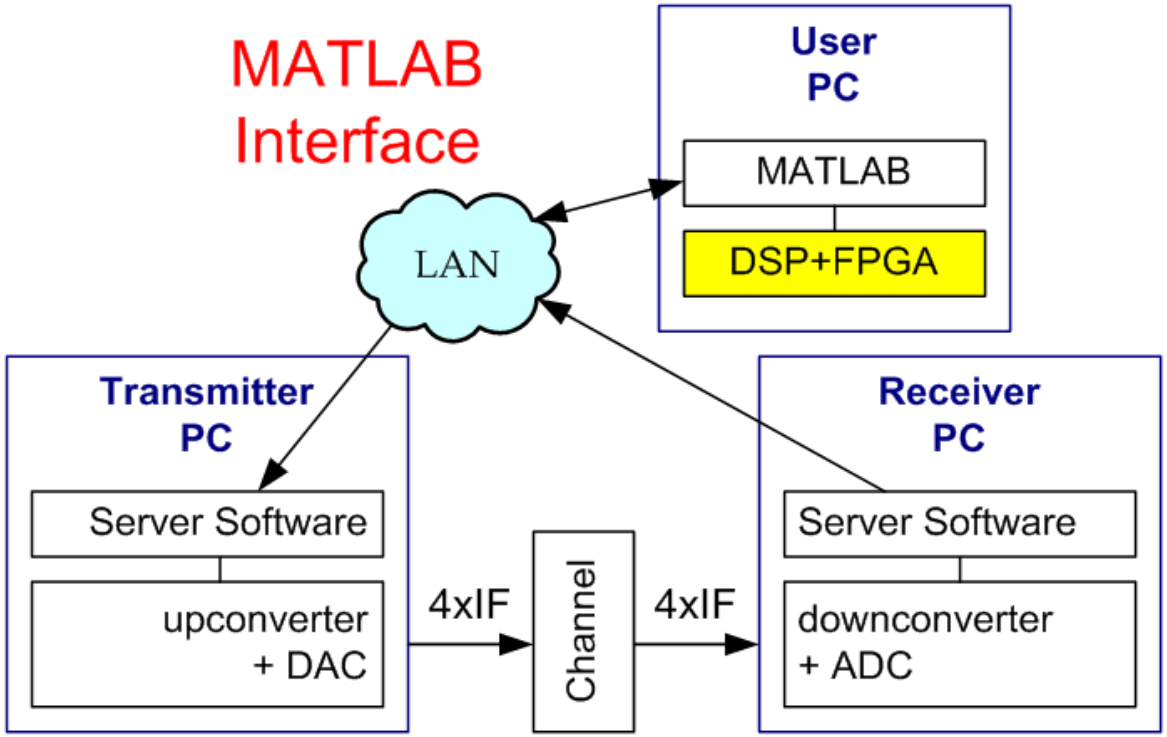

DSP = Digital Signal Processor FPGA = Field Programmable Gate Array

DSP+FPGA Boards

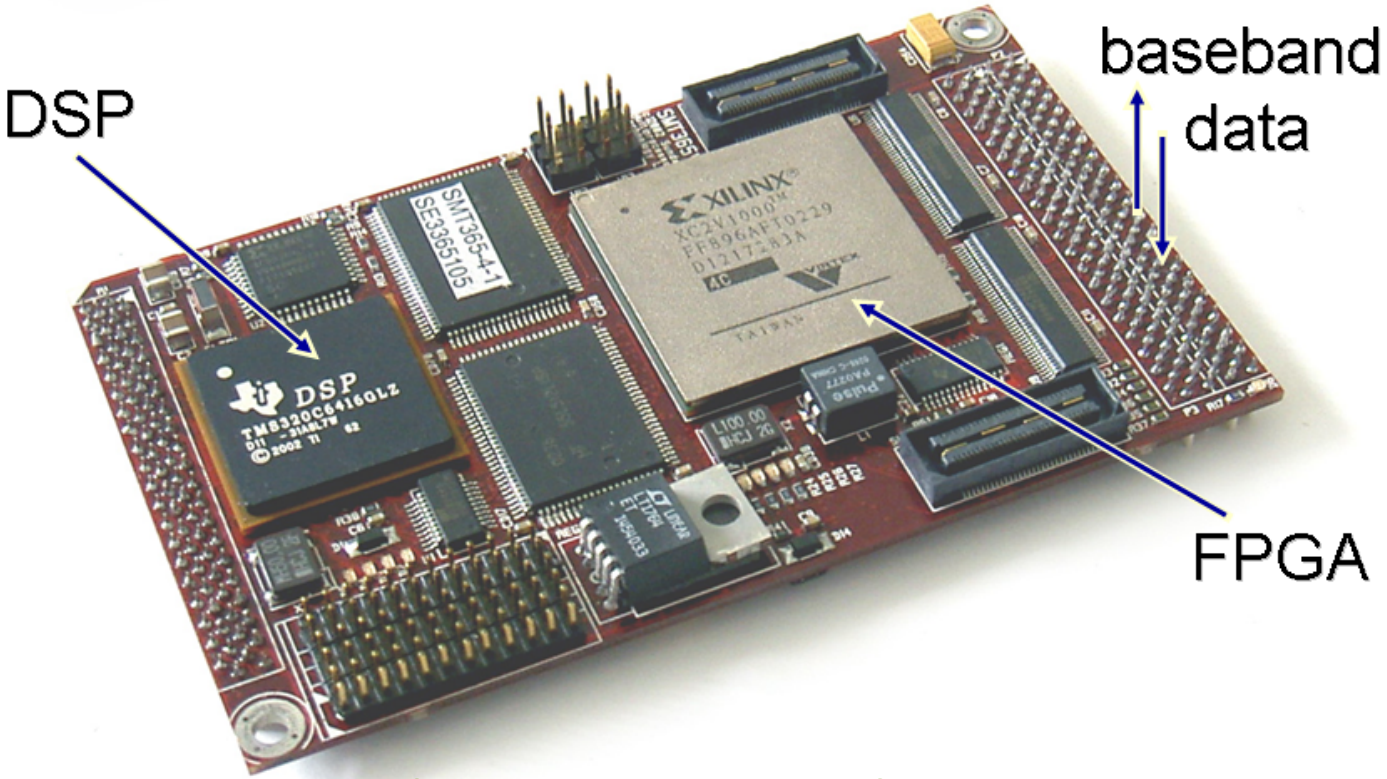

Sundance STM 365, www.sundance.com

The User Only Has To

- set up a channel
- write some lines of MATLAB code

  - generate complex baseband data samples
  - provide some options
  - save all this to a ".mat" file

  - wait for the received data to appear in a corresponding ".mat" file

- measure, measure, measure....

The User Only Has To

```
xvTXData     = 0.1*(ones(1,9)*sin([1:9]'*[1:2^17]*pi/20))'-0.05;
xvTXData     = int16(xvTXData*8176);

xcTXDir          = '\\Pollux\MIMO_TXData\';
xvFileName       = 'Test Multitone';
xvTXDataOptions = [1, inf , 70.0, 32, 0, 0, 0, 0, 0, 0, 0, 0, 0]

save([xcTXDir xvFileName '.mat'],'xvTXData','xvTXDataOptions');
xvFID=fopen([xcTXDir xvFileName '.do'],'w'); fclose(xvFID);
```

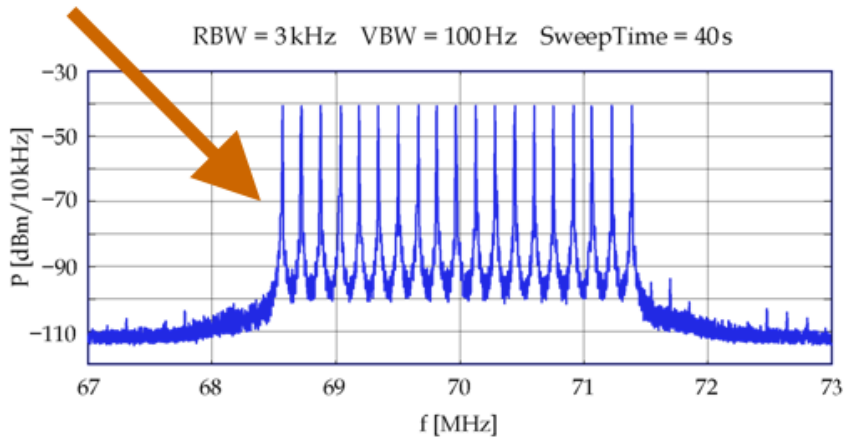

Received 16 QAM

- The MATLAB interface provides only complex baseband data samples at max. 6 MHz Bandwidth

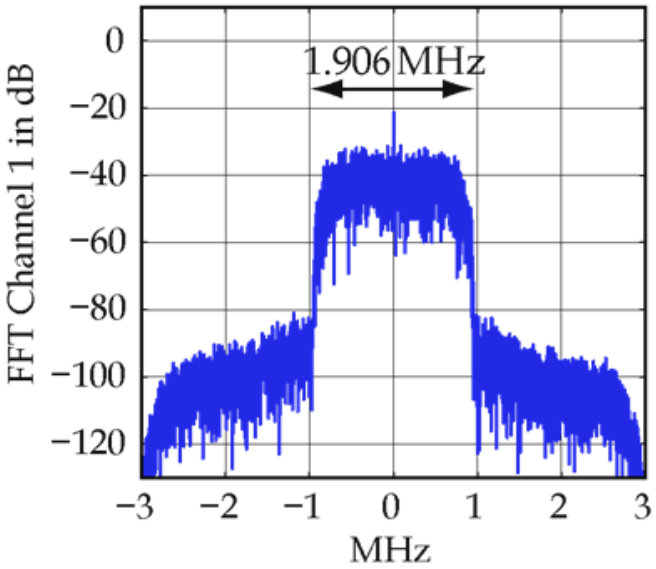

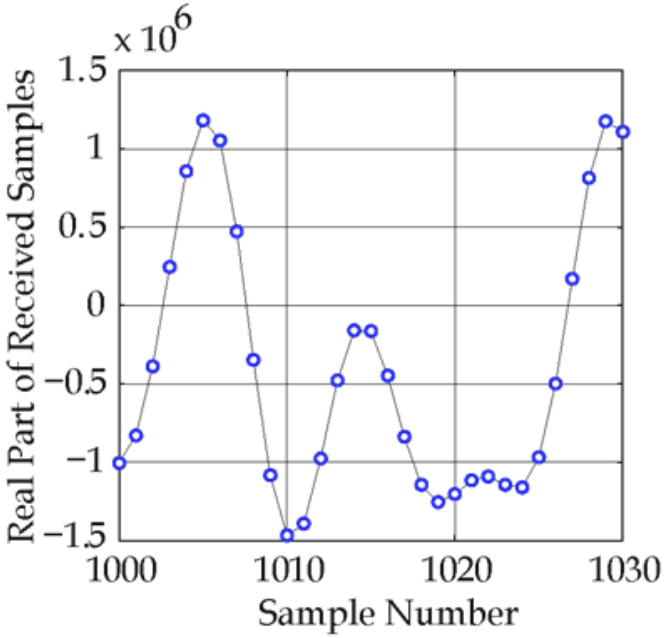

Received 16 QAM

- The rest of the signal processing has to be done by the user on his own PC:

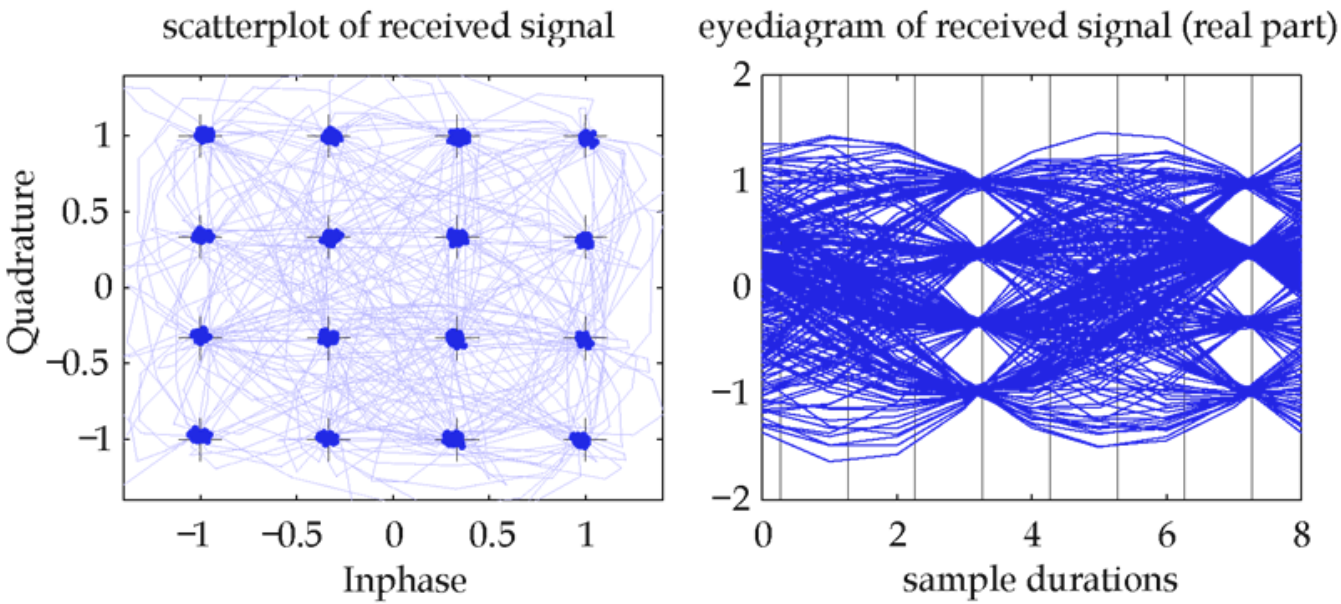

BER SISO Channel

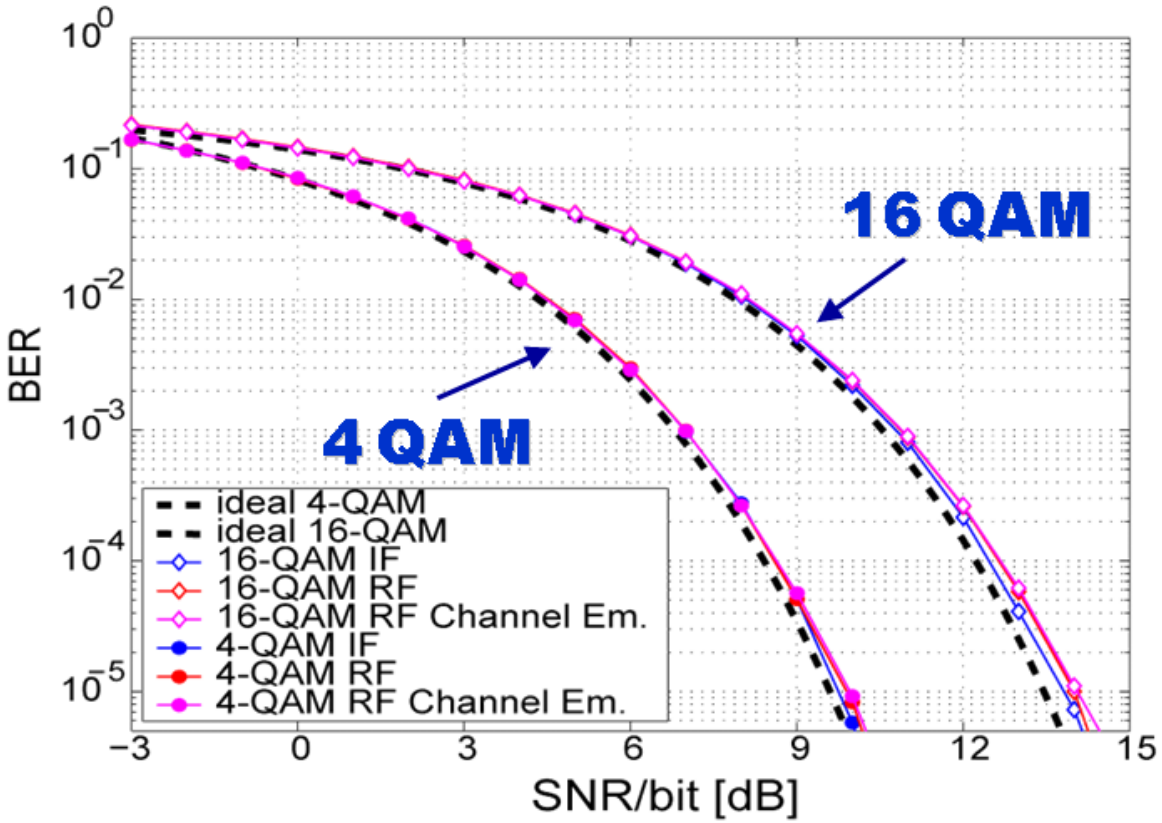

Averaged over 3.19 million transmit symbols per measurement point

BER MISO with Feedback

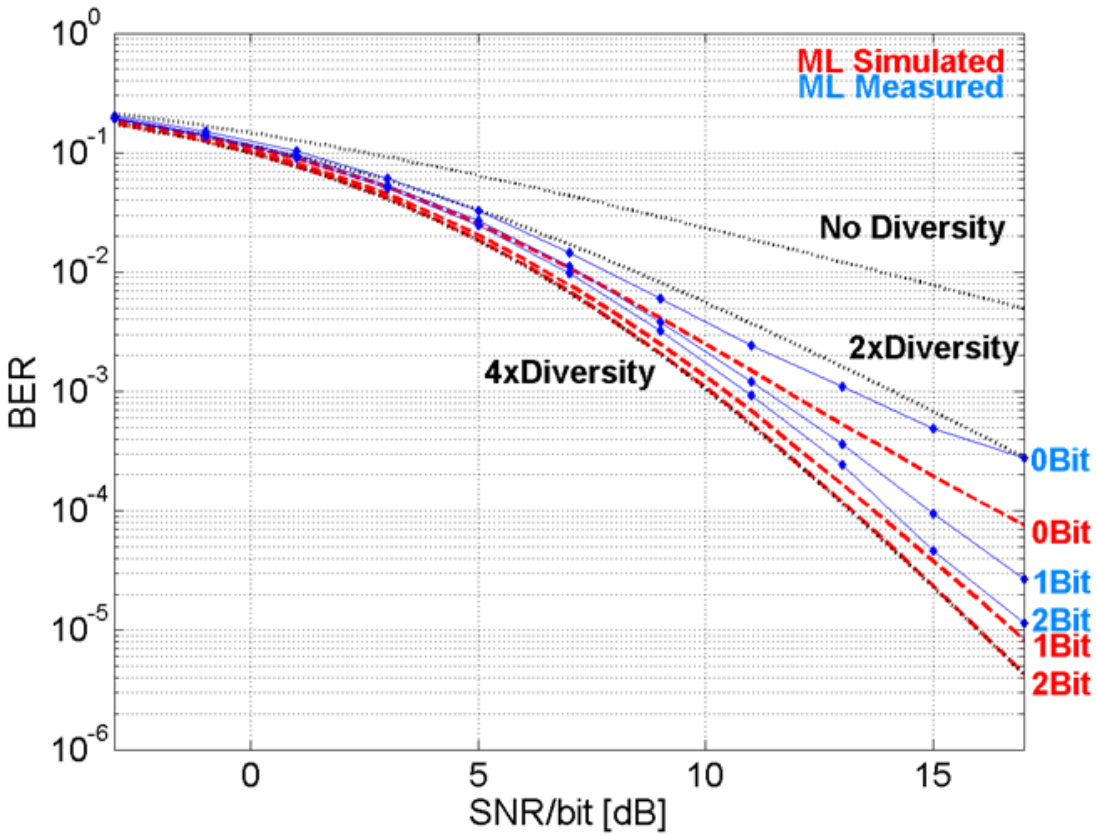

Conclusion

The MIMO Testbed developed is able to

transmit and receive
complex baseband data samples
on 4x4 antennas.

A user can access this system

easily
from anywhere in the LAN
by the use of simple MATLAB commands.

Thank you for your attention