VIRM 11 – VIBRATIONS IN ROTATING MACHINERY

Organised by

Institution of MECHANICAL ENGINEERS

Tribology Group and Mechatronics, Informatics & Control Group
Conference

13–15 September 2016
University of Manchester

ENGINEERING INTEGRITY SOCIETY

topEngineer

Institution of Mechanical Engineers

One Birdcage Walk

Westminster

London SW1H 9JJ, UK

First published 2016, Institution of Mechanical Engineers.

ISBN: 978-0-9572374-8-3

Produced from electronic copy supplied by authors.

CONTENTS

Parametric excitation in rotating machinery

H Ecker
Department of Mechanical Engineering, Vienna University of Technology, Austria

Dedicated to Hon. Prof. Dr. Aleš Tondl (1925 - 2016) Prague, Czech Republic, a great rotordynamicist and a wonderful friend.

1. INTRODUCTION

Rotating systems are known for their rich dynamic behaviour. Compared to ordinary multi-body systems, the complexity of rotor systems is increased by the dynamic contribution of machine parts rotating at high angular speeds and, last but not least, by the important influence of bearings and seals. Therefore, analytical, numerical and experimental studies of such systems have been a challenge since long.

This challenge has inspired scientists around the world to work on unresolved problems and marginally understood phenomena. One of these open questions concerns time-periodic parameters in rotor systems and their consequences for such systems. According to various sources, research related to this topic was conducted as early as 1918 by Prandtl on a "Laval-rotor with non-circular shaft". Many papers have been published since then, but there is still need for research and further investigations.

Time-periodic systems, also termed "parametrically excited systems", serve as a good example for the fact that it is never really known in science if a field of research is fully understood or if it still hides some secrets yet to be discovered. For many years it seemed that parametric excitation has to be seen as a phenomenon that contributes only in an unfavourable or even negative way to the dynamic behaviour of rotating systems. It is one of the numerous merits of Tondl that he has discovered only rather recently also positive aspects of parametric excitation. Therefore, this contribution will give a brief overview on the negative and on the positive aspects of parametric excitation in rotation machinery. It cannot offer a comprehensive state-of-the-art article due to space restrictions, but hopefully it can create some interest in this exciting topic and initiate further studies.

2. ADVERSE DYNAMICAL EFFECTS OF ASYMMETRIC ROTORS

Different types of anisotropy (asymmetry) may be present in rotating systems, occurring either in the non-rotating components or in the rotating components, and if worse comes to worst in both of them. Anisotropy in non-rotating parts mostly concerns stiffness and damping of bearings, seals and mounts. Anisotropy in rotating parts of the rotor system is predominantly a consequence of axially asymmetric shafts. As mentioned above, this kind of problem has already been addressed in the early 20th century by Prandtl (1918), followed by Stodola (1922), Rodgers (1922) and many others thereafter.

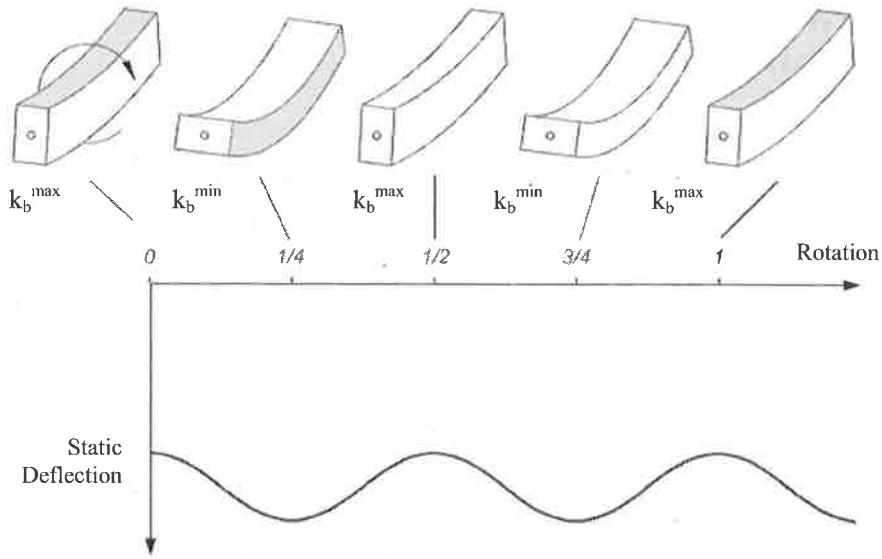

Fig. 1. Two-periodic change of the static deflection and of the bending stiffness k_b in vertical direction of an axially asymmetric shaft with rectangular cross-section due to gravitational forces.

As can be seen from the textbook example of a rectangular shaft (Fig. 1), the bending stiffness k_b in vertical direction changes twice for one full rotation of the shaft, and so does the static deflection. Clearly, the bending stiffness is a periodic function of the angular position of the shaft $k_b(\varphi)= k_b(\varphi+\pi)$. Consequently, the equations of motion for even the simplest rotor model showing this effect will be a set of non-linear differential equations due to angular periodicity of the bending stiffness.

Time-periodicity only comes into play via the assumption of a constant angular velocity $\Omega=\varphi t$ of the rotor. This convenient restriction considerably simplifies the problem of solving the governing differential equation as it is now reduced to a linear time-periodic (LTP) problem. If anisotropy only occurs in rotating components of the system, a smart coordinate transformation from the commonly used fixed reference frame to a rotating one can even completely eliminate the time periodicity and standard solution techniques can be used. But even if time-periodicity of the system equations cannot be avoided, there are methods available to solve LTP-differential equations. Floquet's theorem and the properties of Hill's determinants are known for long and have been used extensively to solve such problems in rotor dynamics analytically, semi-analytically or numerically.

Numerous studies have been carried out in the past, investigating the dynamical behaviour of rotors with anisotropic shafts. There are two reasons for this interest: (1) the so-called "half-speed resonance" and (2) a possible instability of the rotor system at the critical speed. The second effect results from a splitting of the regular single critical speed in two closely located speeds that embrace an interval of instability. This phenomenon has attracted much interest, since instabilities in rotor systems always have the potential for catastrophic failures and need to be investigated thoroughly. Among those who contributed significantly to the knowledge on rotor instability was Tondl, who published his first and widely recognized book on "Some Problems of Rotor Dynamics" [1] in 1965. Much of the content and the findings in this book have become state-of-the-art in rotor

dynamics. Nevertheless, a nice and interesting but less known result is taken from this book and is briefly discussed here.

Starting from a single mass Laval-rotor with an asymmetric massless shaft, Tondl investigates the free vibrations and the stability of motion for a rotor without a disk, but with a uniformly distributed mass along the shaft. Evidently, this rotor has an infinite number of natural frequencies and of critical speeds. In the case of an asymmetric shaft, each resonance frequency splits up into two frequencies, with an interval of instability inbetween. Figure 2 is a stability chart for such a rotor, with the eigenfrequencies λ plotted versus the rotational frequency ω on the horizontal axis. The hatched areas mark the intervals of instability due to shaft anisotropy. As one can see, these intervals occur for each pair of natural frequencies and become more dense and even overlap with increasing frequency ω. Of course, in general damping increases with increasing mode number and also reduces regions of instability, but it is still worth to keep in mind that critical speeds at a higher speed level may also be risky because of rotor instability.

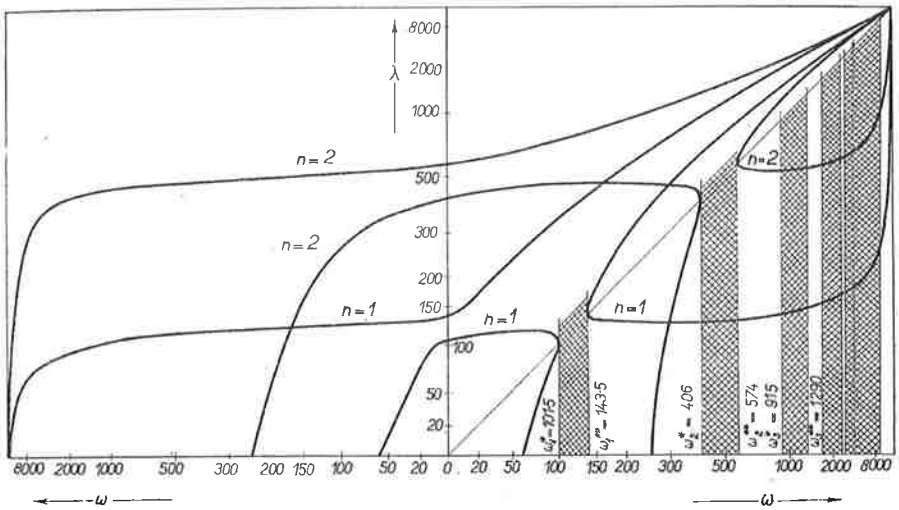

Fig. 2. From [1], with original caption: "Figure shows the graph for the natural frequency λ (λ_0 + ω) plotted against ω for parameter values as listed. For this case we have 10 intervals of instability [(ω_n*, ω_n), n=1,2,3...10]. Intervals six to ten merge into a single one."**

Although the negative effects of asymmetry are well known, rotors with anisotropic bending stiffness cannot be avoided. For some electrical motors this asymmetry is inherent in the design and measures need to be taken to reduce the degree of asymmetry to a certain acceptable level. In other cases, anisotropy of the rotor is just a result of production tolerances.

Figure 3 shows a schematic of a paper guide roll. Numerous such rolls are used in papermaking machines and convey the paper being produced and processed. With the demand for high volume output of such paper machines, the width of the paper sheet and the length of such rolls grows. Rolls in new machines may have a span of up to 9 metres. Another parameter for increasing the production volume is speed. Such rolls may operate at rotational speeds of 600-800 rpm. Considering the delicate product they manufacture (paper is thin and of rather limited strength), it becomes clear that rotor dynamic issues are important in such plants.

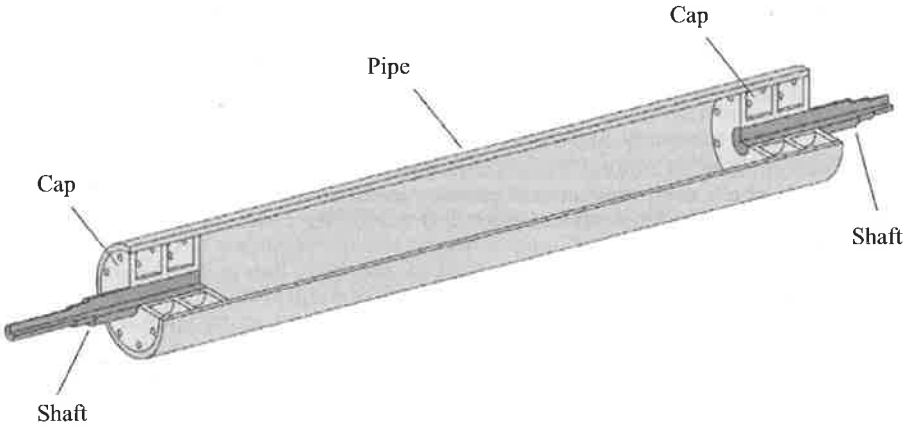

Fig. 3. Schematic of a paper guide roll.

Rolls as shown in Fig.3 are mainly produced from sheet metal by rolling and welding. The intermediate product is basically a long pipe with a rather small wall thickness. Then the inside of both ends of this pipe is machined and prepared for fitting the caps. After that, the roll is put on a large lathe and the surface of the roll is machined to high precision. The result is a roll with a nearly perfect circular outside. However, the wall thickness of the roll varies along the circumference, thus creating a rotor with anisotropic bending stiffness.

Hence, paper guide rolls exhibit dynamic phenomena as described above: Splitting of the critical speed and half-speed resonance. Because these rolls are operated below the critical speed, resonances and instability are not that much of an issue. But the half-speed resonance can be observed and is a major problem, not only when operating the rolls, but also when it comes to balancing such rolls.

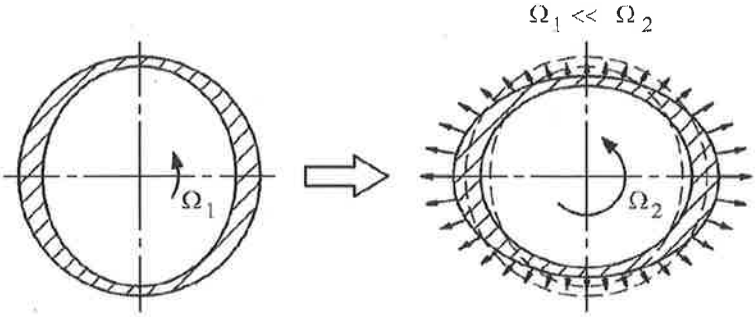

Fig. 4. Ovalisation caused by non-homogeneous centrifugal forces due to non-uniform thickness of the roll [2].

Furthermore, yet another problem arises from the anisotropy caused by non-uniform wall thickness, which is termed "ovalisation". The non-uniform mass distribution along the circumference of the roll, in combination with the rather high rotational speeds, creates a non-homogeneous distribution of centrifugal forces. This force distribution acts on the rather flexible pipe-structure and deforms it such that the formerly circular shape on the outside is deformed to an oval shape, see Fig.4. Not only can the deformation itself become a problem for the paper production process, but the deformation also changes the geometric properties of the cross-section and has therefore an influence on the bending stiffness and the

anisotropy of the roll. Moreover, one has to keep in mind that all the properties discussed so far vary along the roll axis and for a full description of the paper guide roll an ovalisation function along the axis is needed.

Up to this point, simple models as suggested in the literature and discussed very briefly above are useful, give valuable insight and may accelerate calculations considerably. But with the need for a 3D-model that also includes properties as a function of the axial dimension of the rotor, only a full 3D-Finite Element model can be used for reliable results.

Figure 5 presents the result of a FE-reference calculation for a paper guide roll with an assumed thickness distribution along the circumference and the roll axis. The plot shows the relative deformation with respect to the initial circular shape caused by centrifugal forces. Of course the deflection is exaggerated to become visible. It is easy to recognize that deformation is restricted near both ends due to the stiffening effect of the caps. By employing such FE-models, the computation of the exact bending stiffness for both principle axes is possible. The input needed for such models can be obtained from an approximated geometry of a roll in case of theoretical studies. With a suitable measurement system available, also real rolls can be measured to provide the necessary information for the FE-model. Once the model is established, the simultaneous computation of ovalisation and the effect of stiffness-manipulating measures like cutting, drilling and machining on the inside of the roll is possible.

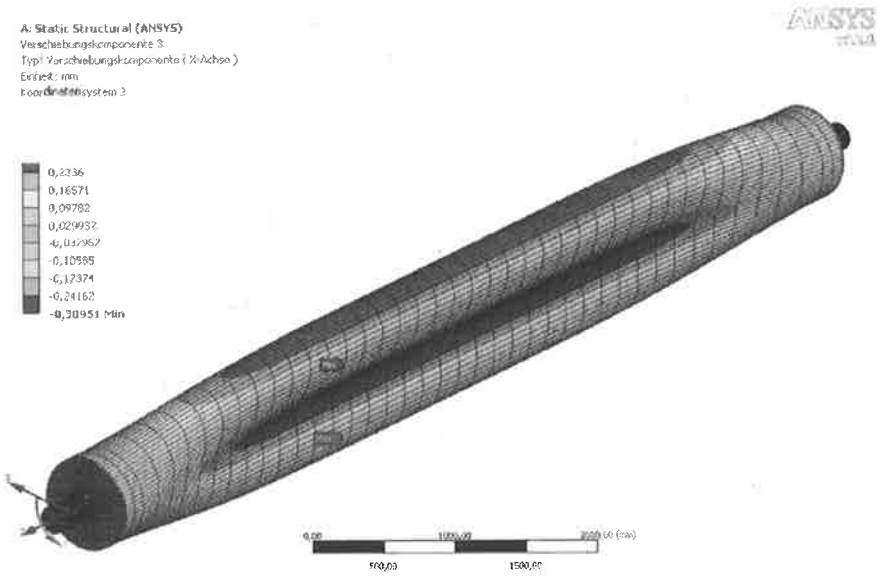

Fig. 5. Exaggerated deformation of a paper guide roll due to non-uniform centrifugal forces [2].

In [2] a FE-model was developed, based on related works by Boru [3] and Malta [4]. The model was tailored to the needs for investigating the dynamics of paper machine rolls was. Based on the measured geometry of a paper guide roll it allows to calculate the quasi-static dynamic response at arbitrary rotational speeds. Of special interest is the speed range near the half-speed resonance, where excessive vibrations have to be avoided. In Fig. 6 a comparison of measurements and of computed results is shown. The diagram to the left has been obtained by measuring a radial signal at the midspan position of a roll. It shows the very small

synchronous (1X) signal due to unbalance excitation (black line), and more prominently the double-frequency (2X) signal (red line) as well. Obviously, the double frequency "weight resonance" occurs near 500 rpm. The diagram to the right shows the related computed results, obtained from software developed in [2]. The qualitative and quantitative agreement of the results is very good and only minor deviations occur when passing the half-speed resonance. The computed maximum amplitudes match the measurement data very well. This allows a reliable prediction on how modifications by machining the roll will change the vibration amplitudes and it opens the door to an optimized production process.

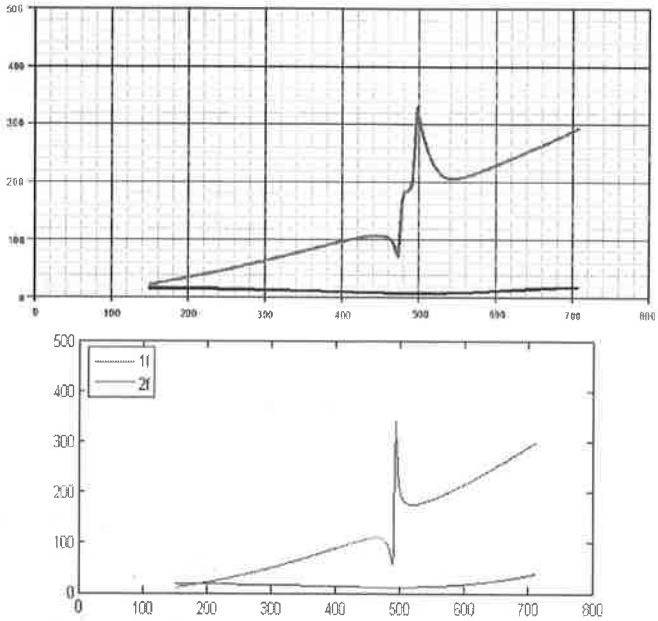

Fig. 6. Measured (top) and computed (bottom) 1X and 2X amplitudes of the radial signal at the midspan position of a paper guide roll as a function of the rotational speed [2].

3. TAKING ADVANTAGE OF PARAMETRIC EXCITATION

As mentioned in the introduction, unexpected findings may shed a new light on seemingly established knowledge. This happened in 1998 when Tondl published a ground-breaking work titled "To the problem of quenching self-excited vibrations" [5]. The title does not reveal, that the focus of the paper is primarily on parametric excitation (PE) and that a new phenomenon called "parametric anti-resonance" (PAR) is described for the first time. At that time it was well established knowledge that multi-degree of freedom systems (MDOF-systems) with time-periodic parameters may become unstable, if the frequency of the periodic parameter change matches one of the natural frequencies of the system (or multiples of it). This phenomenon is called "parametric resonance" (PR) and it can also occur at various combinations of two natural frequencies. Although it was already known that some parametric combination resonance frequencies do not lead to instabilities, the new finding concerned the observation that such PE-frequencies are not only non-resonant but even enhance the stability of the system. In [5] Tondl shows that this increase of stability may even compensate self-excitation and stabilize an otherwise unstable system.

Since instabilities caused by a self-excitation mechanism are always a concern when designing rotating machinery, it wasn't long before Tondl carried out a further study and applied his new idea to a Laval-rotor, to prove that parametric excitation may suppress self-excited vibrations [6]. This was the starting point for a series of studies and papers, carried out at TU-Vienna and later also at TU-Darmstadt to further investigate the advantageous application of parametric anti-resonances in rotor systems.

Figure 7 shows a schematic of a quite versatile MDOF-rotor model that was used in early studies by Pumhössel and Ecker [7], [8], [9]. Basic features of that 12-DOF rotor model with flexible shaft include unbalance and self-excitation from internal damping or from non-conservative forces. Parametric excitation is assumed to be realized by time-periodic stiffness coefficients of the bearings. At the time when these studies were carried out, actively controlled magnetic bearings seemed to be the ideal means to generate a time-periodic bearing stiffness.

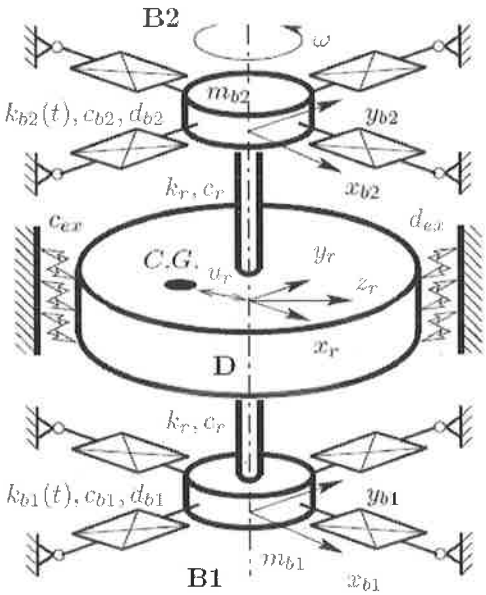

Fig. 7. MDOF-rotor model (12 dof) with 3 rigid masses, a flexible shaft and bearings with a time-periodic stiffness to suppress self-excited vibrations. See [7], [8], [9].

With the help of this model, the beneficial effect of parametric excitation can be demonstrated. In the following, results of a numerical stability study are briefly presented. It is assumed that the balanced rotor operates at a constant angular speed v. Bearing stiffnesses $k_{b1}(t)$ and $k_{b2}(t)$ are harmonic functions with PE-frequency η and PE-amplitudes set to 20% of the bias (average) stiffness value. External damping is low and therefore rotor instability is observed barely above the critical speed $v_{crit} = 1$. Non-linear damping prevents the vibration amplitudes to exceed all limits and lead the rotor into a limit cycle oscillation.

Figure 8 shows a stability chart with the rotor speed v and the PE-frequency η as the parameters of the study. If the PE-frequency is not close to any PE-resonance frequency, the rotor exhibits unstable behaviour for speeds $v > 1$. Near the parametric resonance frequencies $\eta=2\Omega_1$ and $\eta=\Omega_1+\Omega_3$ a decrease of the stability threshold is observed, and the rotor gets unstable even at speeds $v < 1$. However,

choosing the PE-frequency $\eta=\Omega_3-\Omega_1$ has a contrary effect and increases the stability threshold by 40% up to v ~1.4.

Of course, the parametric stiffness excitation applied to the bearings needs to fulfil certain criteria with respect to PE-amplitude e_b^c and PE-frequency η. In Fig.9 another stability map is shown, that demonstrates the influence of these design parameters. As one can see, there exists a certain lower limit for the PE-amplitude to achieve stabilisation of the system. The PE-frequency needs to be adjusted within limits, which become less stringent for larger PE-amplitudes and/or lower levels of self-excitation.

These results created quite some interest and were the basis for further research studies, carried out, by the authors of the original investigations and at TU Darmstadt, see e.g. [10], [11], [12]. Initial concerns about a possibly negative influence of rotor unbalance have been dispelled. Also, with increasing insight into the mechanism of parametric anti-resonances it became clear that the enhancement of damping is largely based on an energy transfer between the vibrational modes of the system. Therefore, suppressing self-excited vibrations is not the only task that may be achieved by parametric excitation.

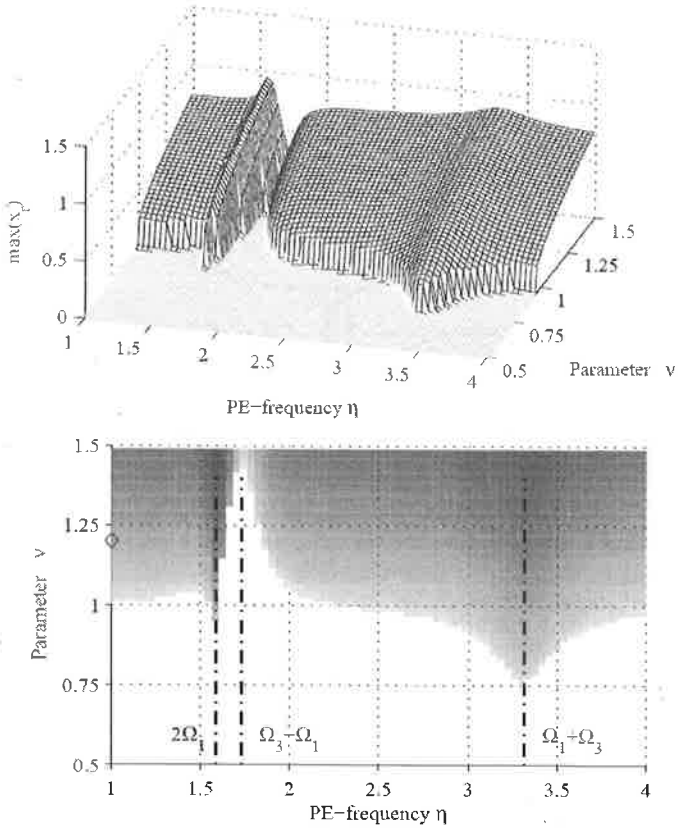

Fig. 8. Stability map of a rotor with internal damping as the source of self-excitation. Maximum amplitudes max(x_r) at rotor disk. Dim.less rotor speed v, PE-frequency η, natural frequencies Ω_i. White area indicates stability. Deflections of the unstable system are limited by nonlinear external damping [9].

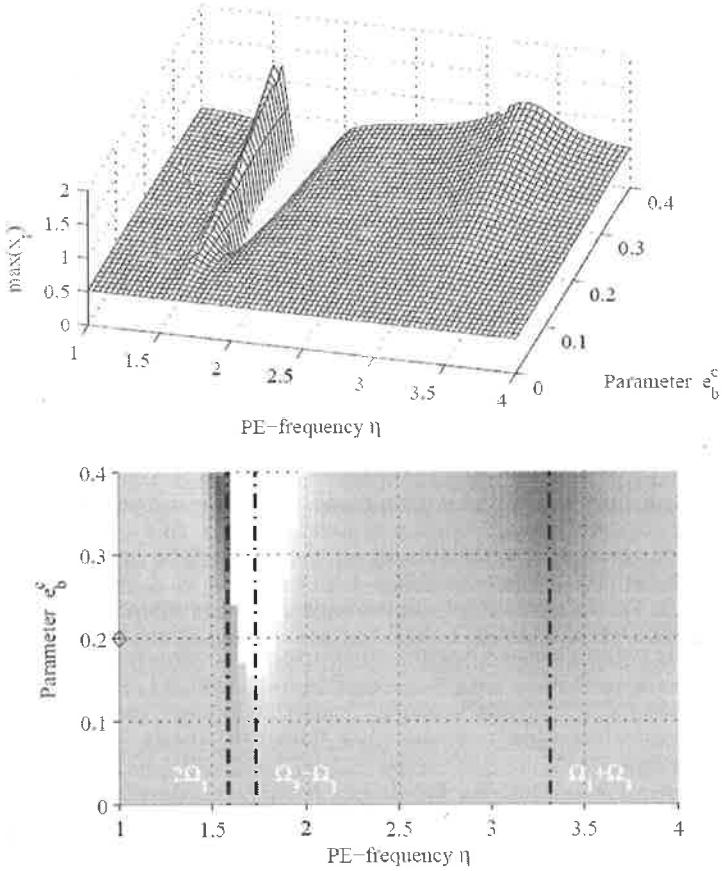

Fig. 9. Stability map of an unstable, self-excited rotor due to internal damping at constant rotor speed v. Maximum amplitudes max(x_r) at rotor disk, PE-frequency η, PE-amplitude e_b^c, natural frequencies Ω_i. White area indicates stability. Deflections of the unstable system are limited by nonlinear external damping [9].

Analytical and detailed numerical studies have proven that parametric stiffness excitation may be used in a beneficial way in rotating machinery. Dohnal et al. presented also experimental evidence of the parametric anti-resonance effect in a rotor system [13]. Research is ongoing and focuses now on the design of fluid film bearings that may be used to create parametric stiffness excitation [14], [15]. This novel concept is another step directing to an industrial application of parametric anti-resonances in rotating machinery.

4. CONCLUSION

Periodically state-dependent changing system parameters are omnipresent in rotating machinery. For stationary operating conditions, these parameter changes can be regarded as time-dependent functions. Linear / non-linear time-periodic systems are also known as "parametrically excited" systems. Certain dynamic phenomena are unique to such systems.

Adverse dynamic behaviour of rotor systems is known for rotor anisotropy. Current research focuses on the detailed modelling of such systems, in order to accurately predict the dynamic behaviour and to investigate the effect of appropriate counter-measures.

However, also positive effects created by parametric excitation have been discovered and taking advantage of parametric anti-resonances in the futuremay be an alternative method to modify and improve the dynamic properties of rotating machinery.

REFERENCES

[1] Tondl, A.: Some problems of Rotor Dynamics. Chapman and Hall, Prague, 1966.

[2] Birnecker, A.: Calculation of Vibrations of Paper Guide Rolls caused by Anisotropic Bending Stiffness (in German). MS-Thesis, Vienna University of Technology, 2011.

[3] Boru, F.E.: Numerical and Experimental Response and Stability Investigation of Anisotropic Rotor-Bearing Systems. PhD-Thesis, University of Kassel, 2010.

[4] Malta, J.: Investigation of Anisotropic Rotor with Different Shaft Orientation. PhD-Thesis, TU Darmstadt, 2009.

[5] Tondl A. To the problem of quenching self-excited vibrations. Acta Technica ČSAV 43:109–116, 1998.

[6] Tondl A.: Self-excited vibration quenching in a rotor system by means of parametric excitation. Acta Technica ČSAV 45, 199-211, 2000.

[7] Pumhössel T.: Untersuchung der Wirkung von Selbst- und Parametererregungen an einem Laval-Rotor. MS-Thesis, Vienna University of Technology, 2002.

[8] Ecker H., Pumhössel, T., Tondl, A.: A study on parametric excitation for suppressing self-excited rotor vibrations. Proceedings of IFToMM 6th Int. Conf. on Rotor Dynamics. Sydney, Australia, 2002.

[9] Ecker H.: Suppression of Self-Excited Vibrations in Mechanical Systems by Parametric Stiffness Excitation. Fortschrittberichte Simulation Vol. 11, ARGESIM, Vienna, 2004.

[10] Ecker H., Tondl A.: Stabilization of a rigid rotor by a time-varying stiffness of the bearing mounts. IMechE - 8th Int. Conf. On Vibrations in Rotating Machinery, Professional Eng. Publ. Ltd, Suffolk, UK, 2004.

[11] Dohnal F., Mace B.R.: Damping of a flexible rotor by time-periodic stiffness and damping variation. 9th International Conference on Vibrations in Rotating Machinery, 2008.

[12] Dohnal F., Markert R.: Enhancement of External Damping of a Flexible Rotor in Active Magnetic Bearings by Time-Periodic Stiffness Variation. Journal of System and Dynamics 5(5), 2011.

[13] Dohnal F., Markert R., Hilsdorf T.: Enhancement of external damping of a flexible rotor in active magnetic bearings by time-periodic stiffness variation. In: 9. Internationale Tagung Schwingungen in rotierenden Maschinen (SIRM2011), Darmstadt, 2011.

[14] Dohnal F., Pfau B., Chasalevris A. :Analytical predictions of a flexible rotor in journal bearings with adjustable geometry to suppress bearing induced instabilities. Proceedings of the 13th International Conference on Dynamical Systems- Theory and Applications Lodz, Poland, 2015.

[15] Pfau B., Rieken M., Markert R.: Numerische Untersuchung eines verstellbaren Gleitlagers zur Unterdrückung von Instabilitäten mittels Parameter-Antiresonanzen. First IFToMM D-A-CH Conference, Dortmund, 2015.