# CONSTRUCTION OF A THIN WALLED CONCRETE SHELL EVENT CANOPY

*Benjamin Kromoser, Johann Kollegger*
*TU Wien, Institute for Structural Engineering*
*Karlsplatz 13/ E212-2*
*1040 Vienna*

## SUMMARY

Shells are efficient structures, which enable a very high utilization of the construction material concrete. Unfortunately, most formwork technologies required for the construction of concrete shells are labor and material intensive. A very resource efficient alternative construction method invented at TU Wien is called "Pneumatic Forming of Hardened Concrete (PFHC)" as described in Kromoser and Kollegger (2014, 2015). A flat concrete plate is transformed into a double curved shell by inflating an air cushion placed under the concrete plate and by tensioning additional post-tensioning tendons mounted at the circumference. Currently the construction method is first practically applied for the construction of an event canopy with the plan measurements of 26.5 x 19.1 m and a height of 4.2 m. The present contribution describes the functionality of the construction method, the design process and the construction process of the structure.

## 1. INTRODUCTION

The utilization of concrete as construction material can be increased sharply by optimizing the form of the structure according to the applied loads. The particular forms found can exemplarily be concrete shells and have a free formed geometry in most cases requiring a complex formwork and falsework to be produced. To address this problem, a new shell construction method was invented at the TU Wien with the name Pneumatic Forming of Hardened Concrete (PFHC). The idea is to simplify the production of such concrete shell structures by bending a thin flat hardened concrete plate to a double curved shell structure. The flat hardened concrete plate is lifted by inflating an air cushion placed underneath the concrete plate and by tensioning post-tensioning tendons mounted at the circumference as shown in Fig. 1. The core of the construction method is the "cold" bending process of concrete itself. The bending behaviour of hardened concrete plates with 50 mm, 100 mm and 120 mm thickness, with different reinforcement types and reinforcement ratios could already be tested in extensive preliminary experiments. In detail, centric tensile tests and bending tests were performed as described in Kromoser and Kollegger (2014, 2015, 2017). The functionality of the complete construction method could already be tested in two large scale experiments where a spherical concrete shell with 10.8 m diameter and 3.2 m height as well as a free formed concrete shell with the plan measurements of 17.6x10.8 m and a height of 2.9 m were erected as explained in Kromoser and Huber (2016). Both shells had a thickness of 50 mm. Currently, in the course of developing the construction method, the next step is to apply the method for the construction of a first building. On behalf of the Austrian Railways (ÖBB infrastructure) a first shell with the plan measurements of 26.5x19.1 m, a height of 4.2 m and a thickness of 50 mm is built in Carinthia in the south of Austria. The building is used to test

Fig. 1: Construction of a concrete shell originating from a thin flat hardened concrete plate by the aid of an air cushion placed underneath the plate and tensioning a post-tensioning tendon mounted at the circumference

and to improve the building technique for the construction of a deer pass over the twin-track railway line Koralmbahn.

## 2. PROJECT SCHEDULE

The shape of the presented concrete shell is optimized for the shell bridge, which is currently built as second building and main structure. An additional development step, described in the present paper, in terms of the construction of a shell exactly in scale 1:2 was introduced to further improve the production process, to avoid procedural problems and to evaluate the accuracy of the built concrete shell on site. The two shells are shown in Fig. 2. Both buildings, the event canopy and the shell bridge, were awarded within one tendering procedure to ensure that one company receives the order to build both structures. The reason for this is to avoid a loss of knowledge between the construction of the first and the second main shell. The complete construction process, the accuracy of the finished shell and all details of the test structure were evaluated after the erection of the test structure was completed and were used to improve the production process and the construction planning of the bridge.

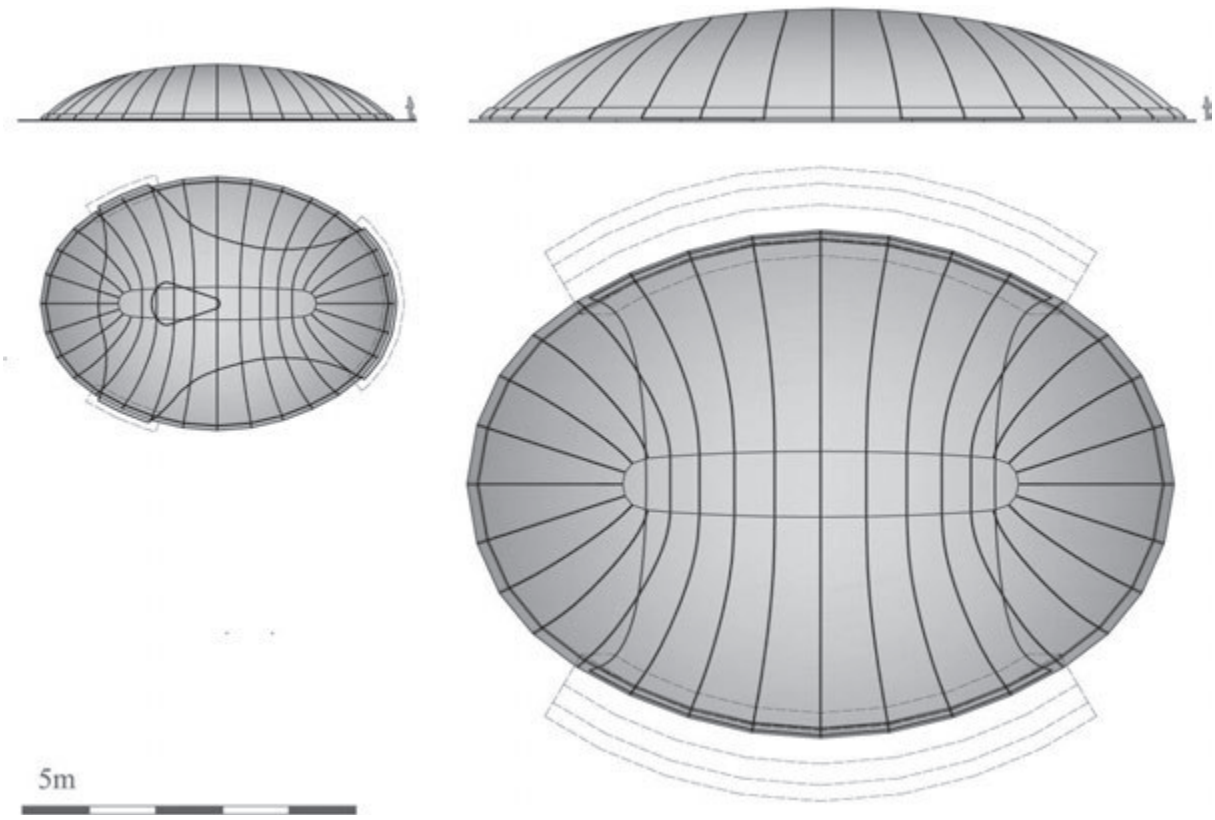


Fig. 2: Concrete shell of the event canopy (left) and the shell bridge serving as deer pass (right)

## 3. DESIGN OF THE SHELLS

### 3.1 Design of the shell bridge

The shape of the complete shell for the shell bridge is mainly affected by three factors (1) the applied loads (dead weight of the shell and the vertical and horizontal forces from the earth covering), (2) the minimization of the construction material needed and (3) the procedural requirements from the PFHC-method. The complete optimization process is described in Pachner and Kromoser (2016). A particle-spring system was chosen as basis for the optimization. Considering the diversity of existing requirements the optimization process of the bridge has been split into four steps as shown in Fig. 3. After finding the optimal geometry for the reference geometry of the bridge, two surface patches were added to complete the cupola. In a third step the resulting geometry consisting of a Non-Uniform Rational B-Spline Surface (NURBS) undergoes a discretization process resulting in semi-discrete segments that will finally be unrolled. The special form of the segments found enables a good approximation of the optimized smooth concrete shell geometry.

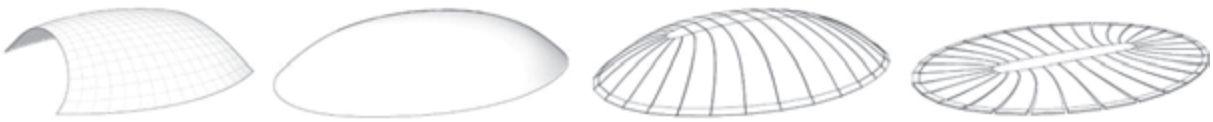

Fig. 3: Design process of the shell bridge serving as deer pass

### 3.2 Design of the event canopy

The geometry of the complete concrete shell for the construction of the event canopy conforms with the found geometry of the bridge in the scale 1:2 as shown in Fig. 2 to be able to measure the shape and to compare it with the designed geometry. Generous cut-outs adjusted to the static behaviour were designed for the further use of the structure. The ready inflated 50 mm thick concrete shell serves as formwork and is part of the final structure. After the joints between the elements are filled additional reinforcement and an additional shotcrete layer are applied in the relevant areas. The total thickness of the final event canopy is constantly decreasing from 220 mm at foundation connection to 150 mm at the vertex. Fig. 5 shows the dimensions of the designed structure. A detailed static analysis showed maximal elastic deformations of 17 mm under self-weight as shown in Fig. 6. The modulus of elasticity was reduced to 2080 – 8810 MPa according to the occurring stresses in the shell. A stability analysis showed a buckling load factor of 8.4 for the first eigenmode for a non-linear load increase until buckling. The first eigenmode is shown in Fig. 7. In addition, the authors performed a parameter study for the impact of imperfections from 0 – 300 mm. The first eigenmode (Fig. 7) was chosen as form for the imperfection. A second parameter study was performed to determine the impact of a decreasing stiffness of the shell on the buckling behaviour. For this study, the modulus of elasticity was chosen constant for the complete structure in contrast to the first stability study explained above.

Fig. 4: Design process of the event canopy: (1) design of the event canopy, (2) completion of the structure to a full dome, (3) discretization to single curved strips, (4) unrolling to a flat plate

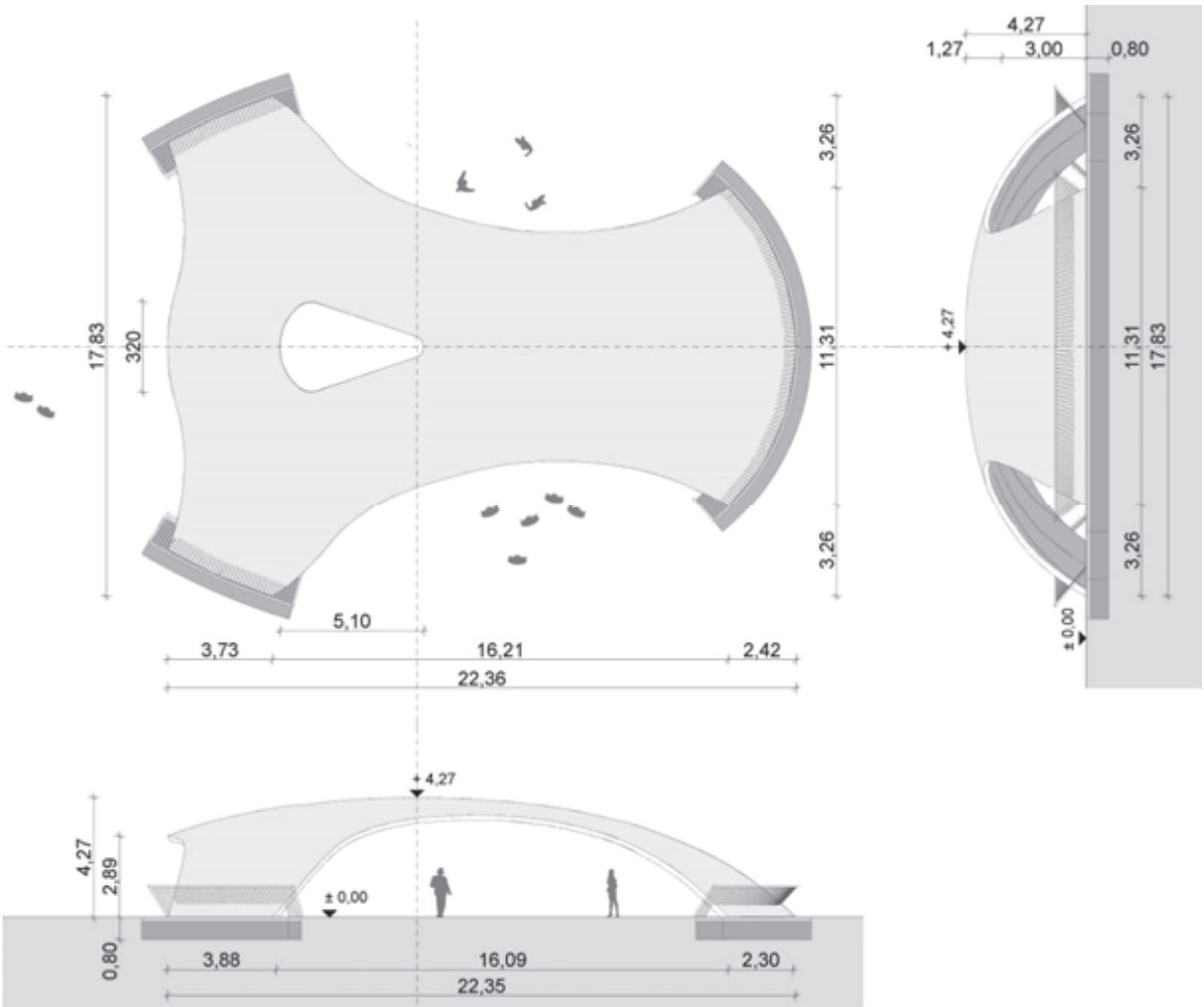


Fig. 5: Design of the event canopy

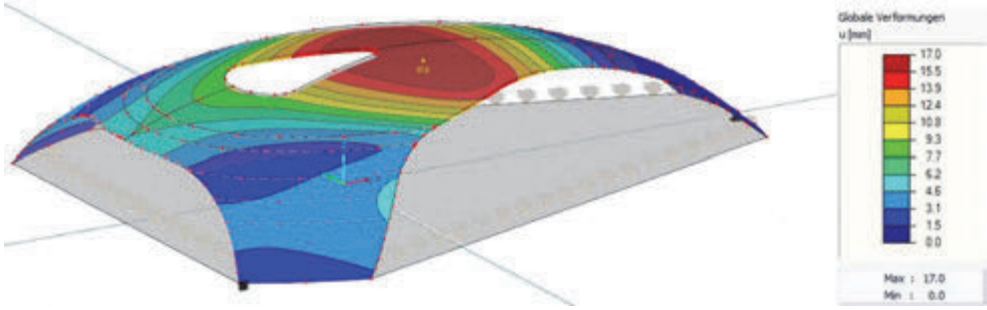


Fig. 6: Elastic deformations under self-weight

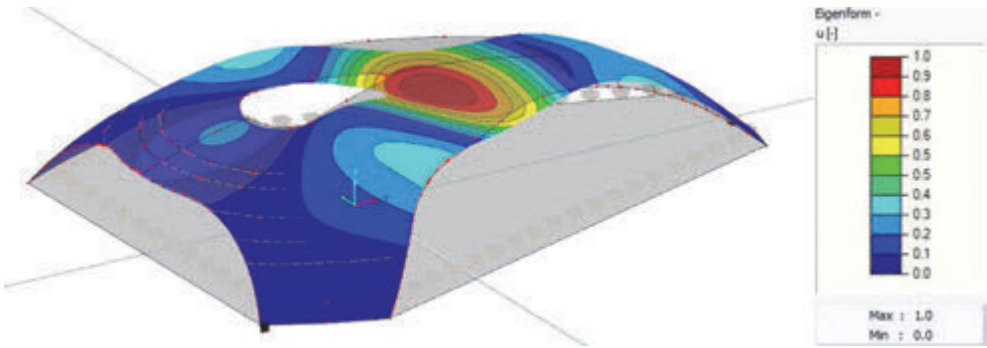


Fig. 7: First eigenmode of the event canopy

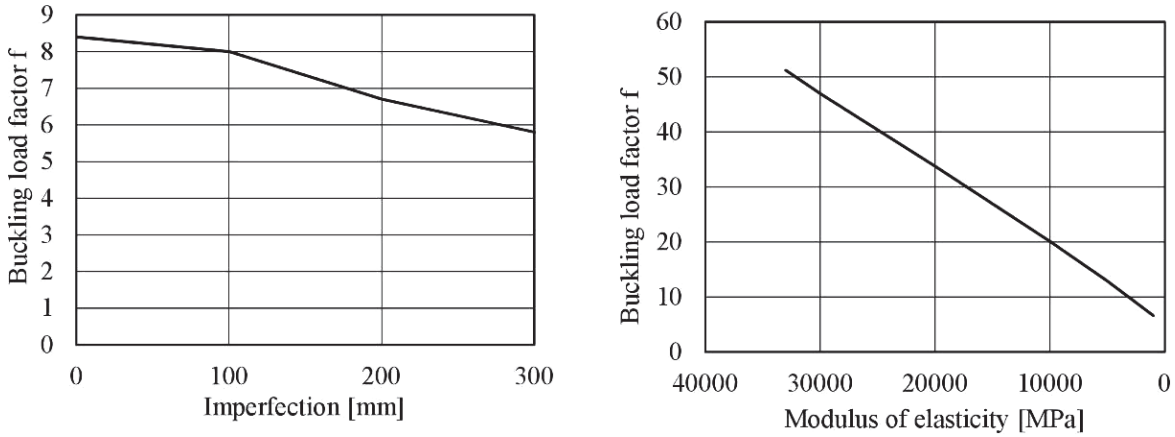


Fig. 8: Buckling load factor – imperfections diagramm (left) and Buckling load factor – Modulus of elasticity diagram (right)

Glass-fibre rods are used as reinforcement for the flat plate to absorb the occurring strains during the bending process. A conventional steel reinforcement is used for the secondary reinforcement of the flat plate and as reinforcement for the additional applied concrete layer.

## 4. CONSTRUCTION PROCEDURE

The complete production process of the event canopy is shown in Fig. 9.

### 4.1 Preparatory works

In the first step of the preparatory works, the drainage and the foundations are built. In the second step a granular subbase and a flat smoothened concrete plate as operation level above is manufactured. In the third step, the foil serving as pneumatic formwork and the single curved formwork as well as the reinforcement are placed on top (see Fig. 10) before the concrete plate is cast. The single curved formwork for the flat plate was produced by using a numerical controlled mill to comply with the specified accuracy. A very accurate production of the flat plate is very important as the flat plate directly reflects the accuracy of the final shell structure. Spacers are mounted between the elements after stripping the formwork of the flat plate. These spacers were made of a mixture out of epoxy resin and sand. This material combination showed a favourable behaviour with elastic properties to absorb peak stresses caused by grains. The compressive strength was determined in compression tests to

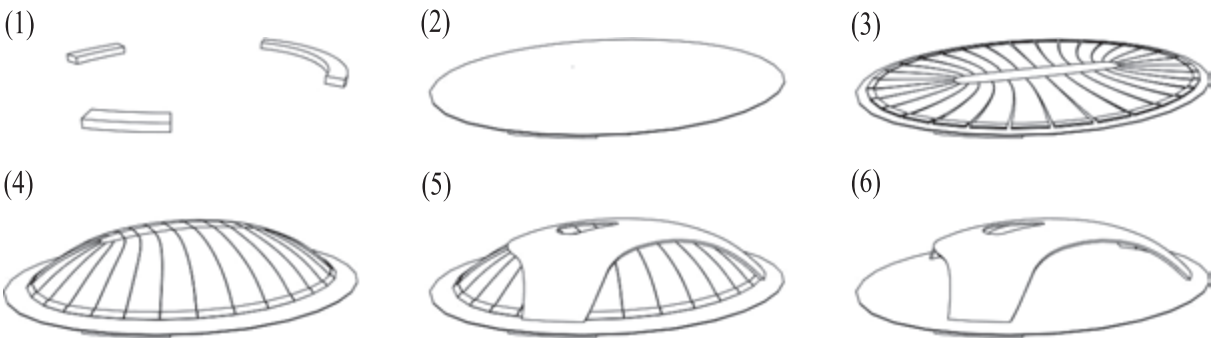


Fig. 9: Construction procedure for the event canopy: (1) foundation, (2) flat smoothened concrete plate as operation level, (3) flat starting plate with wedge shaped outlets, (4) transformed shell, (5) application of the additional reinforcement and the additional concrete layer in the relevant areas, (6) production of the cut-outs

Fig. 10: Air cushion (left) and ready mounted reinforcement of the flat plate (right)

83.3 MPa as a mean value of three experiments. Additional temporary steel profiles are fixed at the elements to avoid a transversal displacement of the elements in the course of the lifting process from the flat plate to the designed double curved shell. These profiles were rented parts and were returned to the formwork company after completion of the transformation process.

### 4.2 Transformation from a flat plate to a double curved shell

In the next step as shown in Fig. 11, the shell is erected with the PFHC construction principle by inflation of the pneumatic formwork and by tensioning the post-tensioning tendons with four jacks at two anchor blocks placed at the circumference. Subsequently the joints are filled with grout and the tendons are post-tensioned to a calculated force afterwards. Furthermore, a 175 mm wide area at the floor connection was roughened and a small abutment was cast to secure the thin shell against horizontal displacements. Fig. 12 (left) shows the ready transformed shell from inside.

### 4.3 Finalizing work

The surface of the shell was high-pressure water jetted to ensure a good bonding between the concrete layers. Then additional reinforcement is placed on top of the shell in the relevant areas as shown in Fig. 12. A special reinforcement is drilled into the foundation to absorb the bending forces and the horizontal forces at the intersection of the shell and the foundation. The additional concrete layer was applied in three steps by using shotcrete of the type SpC 30/37/III/XC4/XF4/HZ1,5/GK4. At first, the reinforcement at the edges of the shell was encased in concrete in the lower parts. In the next step, the first layer was applied in the upper parts of the shell. In the last step, the final 50 mm thick layer shotcrete was sprayed on top of the event canopy and was smoothened afterwards. The air cushion initially serving as

Fig. 11: Initially flat plate (left) and finished concrete shell (right) (© webcam of Dipl.-Ing. Wolfgang Reinisch - http://reinisch.at/ on behalf of the Austrian railways (ÖBB))

Fig. 12: View from inside of the shell for the event canopy after inflation (left) and ready mounted reinforcement for the additional concrete layer

lifting device was inflated again during the concreting work to support the 50 mm thin concrete shell (span 19.1 x 26.5 m). In the following work steps, the cut-outs were made and the edges of the shell were smoothened with repair mortar to avoid a corrosion of the constructive conventional reinforcement of the 50 mm thin shell. Finally, the flat concrete floor is high-pressure water jetted and an inclining concrete is applied.

## 5. ACCOMPANYING MEASUREMENTS AND SUBSEQUENT STRUCTURAL ANALYSIS

The form of the shell was steadily supervised by 3D laser scans from inside to be able to assess the changes during the complete construction process. The measured 3D point cloud was approximated by a B-spline surface for the import into a FEM structural analysis software. Thus, it was possible to analyse the static behaviour of the really built structure. The results showed that only small changes with a very minor impact at the static behaviour could be observed after the erection of the shell.

Fig. 13: Event canopy during the cutting process with view from above (left) and view from inside (right)

## 6. CONCLUSIONS

Concrete shells are efficient structures. The PFHC construction principle provides an alternative way to build these kind of structures with high accuracy without requiring the labour and material intensive formwork. The core of the construction method, bending hardened concrete plates, could be optimized within numerous preliminary tests and the

functionality could be tested within two large scale experiments. Currently the construction method is first practically applied on behalf of the Austrian Railways (ÖBB). A two-step way was chosen for a first practical application of the construction method. At first, an event canopy, described in the present contribution, was built as test structure for the construction of a shell bridge over the two-rail track Koralmbahn. A detailed 3D laser scan of the shell showed minor deviations to the designed reference geometry. The construction process and all details of the construction were analysed and improved for the design and construction of the bridge. Summarizing, the construction of the event canopy proved the good applicability of the construction method on site and delivered valuable new findings for a further improvement.

## 6. ACKNOWLEDGEMENTS

The presented project is designed by TU Wien in collaboration with the engineering office Öhlinger+Partner ZT Ges.m.b.H. and is built by the construction company Kostmann GesmbH. The inspecting structural analysis was done by the engineering office ZKP ZT GmbH and the tendering was prepared by the engineering office Tecton Consult Baumanagement ZT GmbH. The project is realized on behalf of the Austrian Railways (ÖBB). The authors gratefully acknowledge to all partners for the good cooperation.

## 7. REFERENCES

Kromoser B and Kollegger J. (2014), „Herstellung von Schalentragwerken aus Beton mit der „Pneumatic Wedge Method“ - Ein neues Bauverfahren für den Bau von zweifach gekrümmten Betonflächen”, Beton- und Stahlbetonbau 109, Heft 8, 2014, p. 557–565.

Kromoser B and Kollegger J. (2015), “Application areas for pneumatic forming of hardened concrete”, Journal of the International Association for Shell and Spatial structures (IASS) Vol. 56, No. 3, 2015, p. 187-198.

Kromoser B, Kollegger J. (2015), “Pneumatic Forming of Hardened Concrete – building shells in the 21st century”, Structural Concrete, Volume 16, Issue 2, 2015.

Kromoser B and Kollegger J. (2017), „Aktives Verformen von ausgehärteten Betonelementen zur Herstellung von räumlich gekrümmten Betonflächen”, Beton- und Stahlbetonbau 112, Issue 2, 2014, p. 106–115.

Kromoser B and Huber P. (2016), „Pneumatic Formwork Systems in Structural Engineering”, Advances in Materials Science and Engineering, vol. 2016, 13 pages.

Pachner T., Kromoser B. (2016), „Structural optimization of a shell bridge built with the Pneumatic Forming of Hardened Concrete construction method”, Proceedings of the IASS Annual Symposium 2016, “Spatial Structures in the 21st Century”, 26–30 September, 2016, Tokyo, Japan.