The FUSE Microgrid: Academic Research on Critical Infrastructures using the PI System

Presented by: Dr. Joachim Fabini,
Senior Scientist,
TU Wien, Austria

TECHNISCHE UNIVERSITÄT WIEN
Vienna | Austria

About TU Wien

- TU Wien is one of the major Austrian universities
  - Founded 1815
  - Focus: natural sciences and technology
  - Teaching and research
  - About 4,800 employees (3,300 scientific), 30,000 students

© TU Wien, Thomas Blazina

Institute of Telecommunications: CN group

- Institute: about 80 employees
- Four full professors, six research groups
- Research ranges from physical-layer communications (5G, vehicular, antennas) to higher layers, including security.
- **Communication Networks (CN) group**
  - **Research focus: anomaly detection**
  - Lead: Prof. Tanja Zseby
  - Data analysis, (real-time) algorithms, measurement methodologies, hardware, ...
  - Data methods (feature selection, clustering, ML, DL, ...)

The Challenge of (Micro)Grid Management

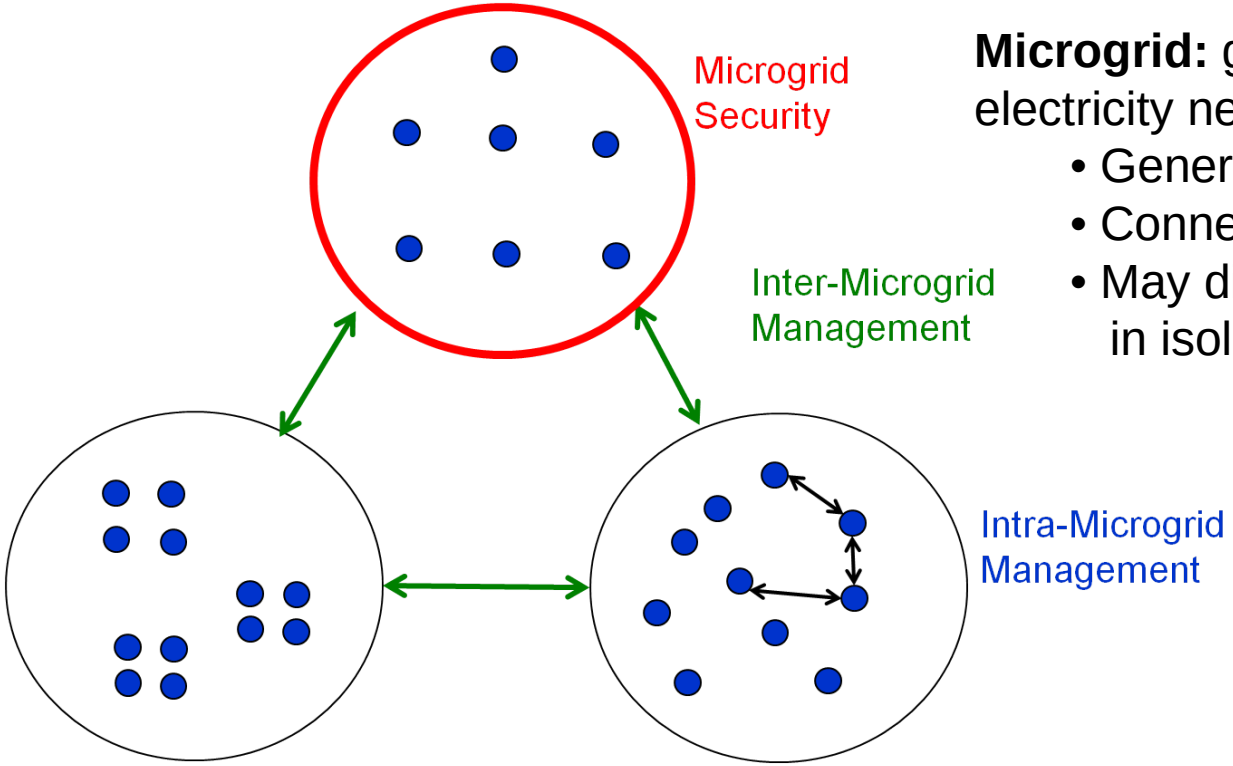

Microgrid: geographically restricted electricity network

- Generators and Loads
- Connected to the (macro)grid
- May disconnect and operate in isolation (islanded mode)

The FUSE Project in a Nutshell

- **FU**ture **S**ecure **E**nergy Networks
  - TU Wien internal project, 4 years
  - Three TU Wien research groups
  - Lead: Prof. Tanja Zseby
    Phd student: Evangelia Xypolytou

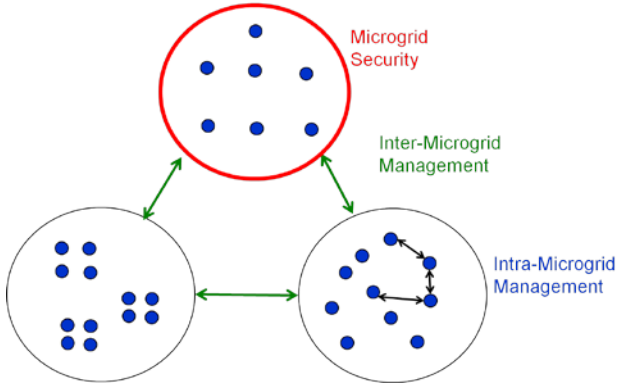

- **Project objective:** Testbed for microgrid research
  - Self-organizing energy networks (IT and Energy)
  - Intra- and Inter-Microgrid Management
  - Microgrid security and protection

The FUSE Microgrid Architecture

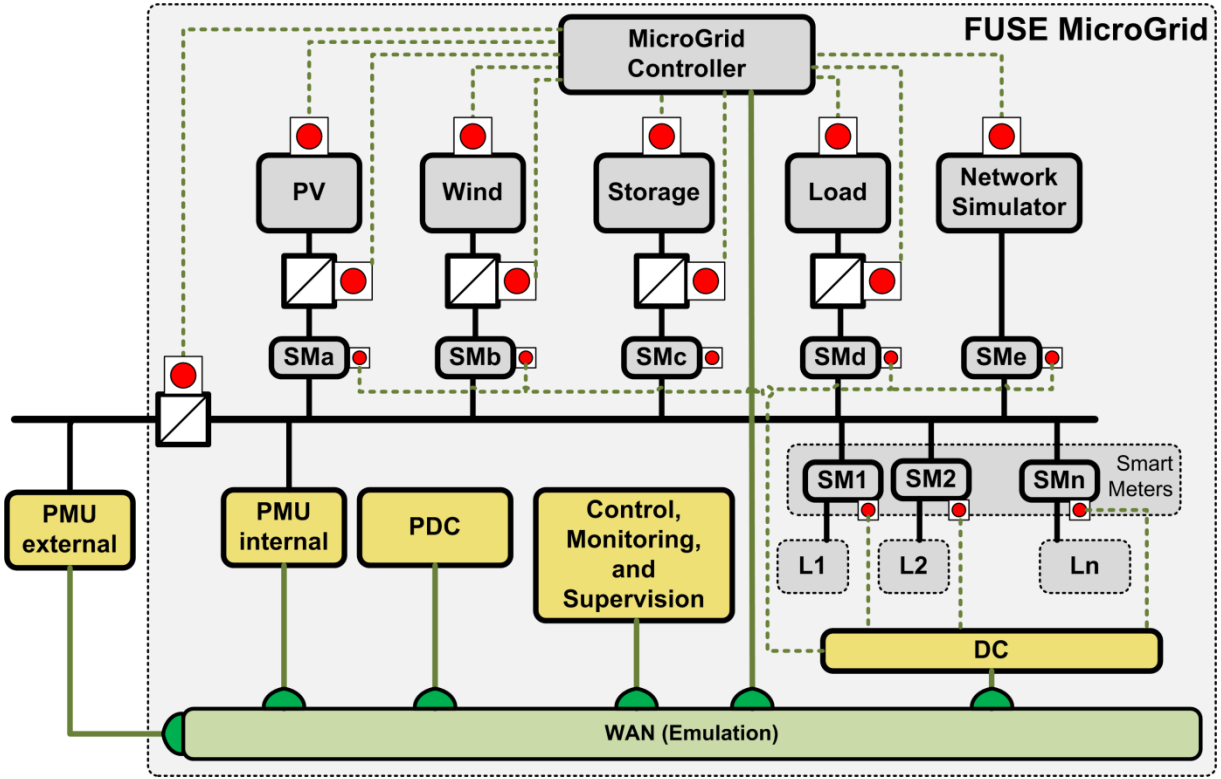

Symbols and Acronyms

- Grid Component
- IT Component (optionally hybrid IT/Grid)
- Breaker
- Sensor-Actuator
- IP-Level Network Trace
- Energy Network
- IT Network (IP-based protocols)
- IT Network (proprietary, non-IP protocol)

PV:	Photovoltaic Generator
Wind:	Wind Energy Converter Emulator
Storage:	Energy Storage (e.g., battery)
Load:	Microgrid Load Emulator
NwSim:	Energy Network Simulator
PMU:	Phasor Measurement Unit
PDC:	Phasor Data Concentrator
SMi:	Smart Meters 1..n
DC:	Data Concentrator (SM)
Li:	Load Connected to SMi

FUSE Monitoring: Interfaces to the PI System

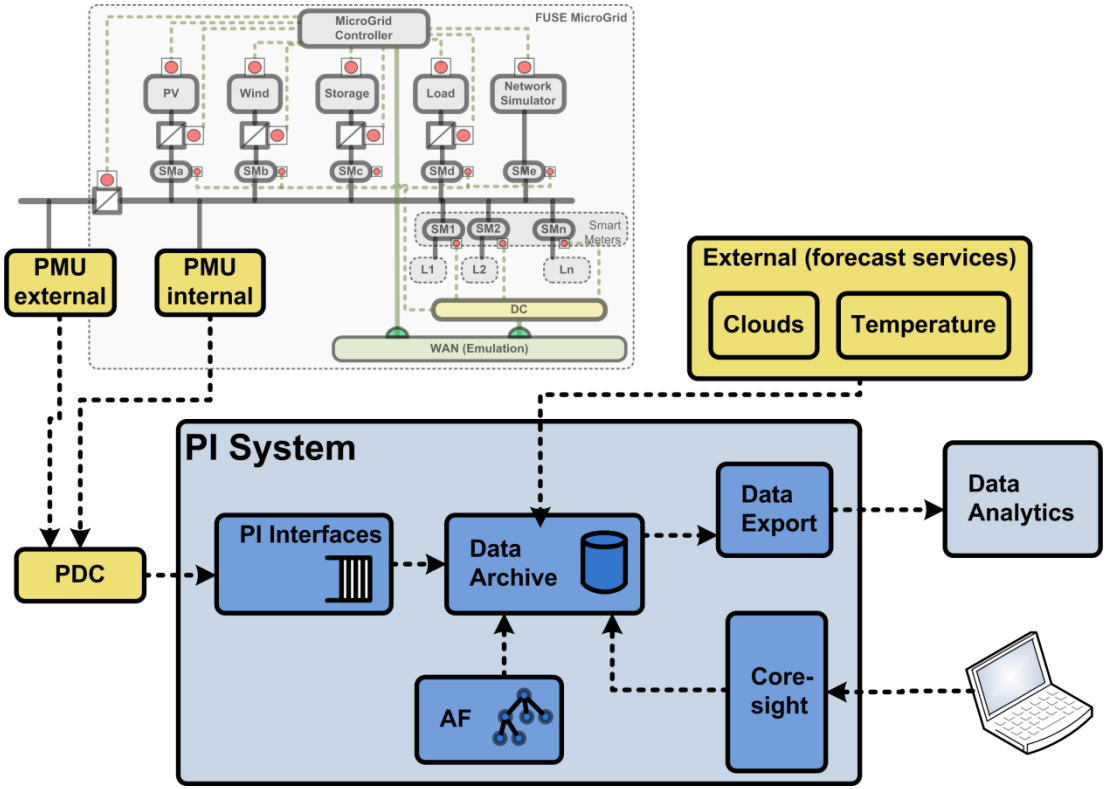

Coresight FUSE System Display

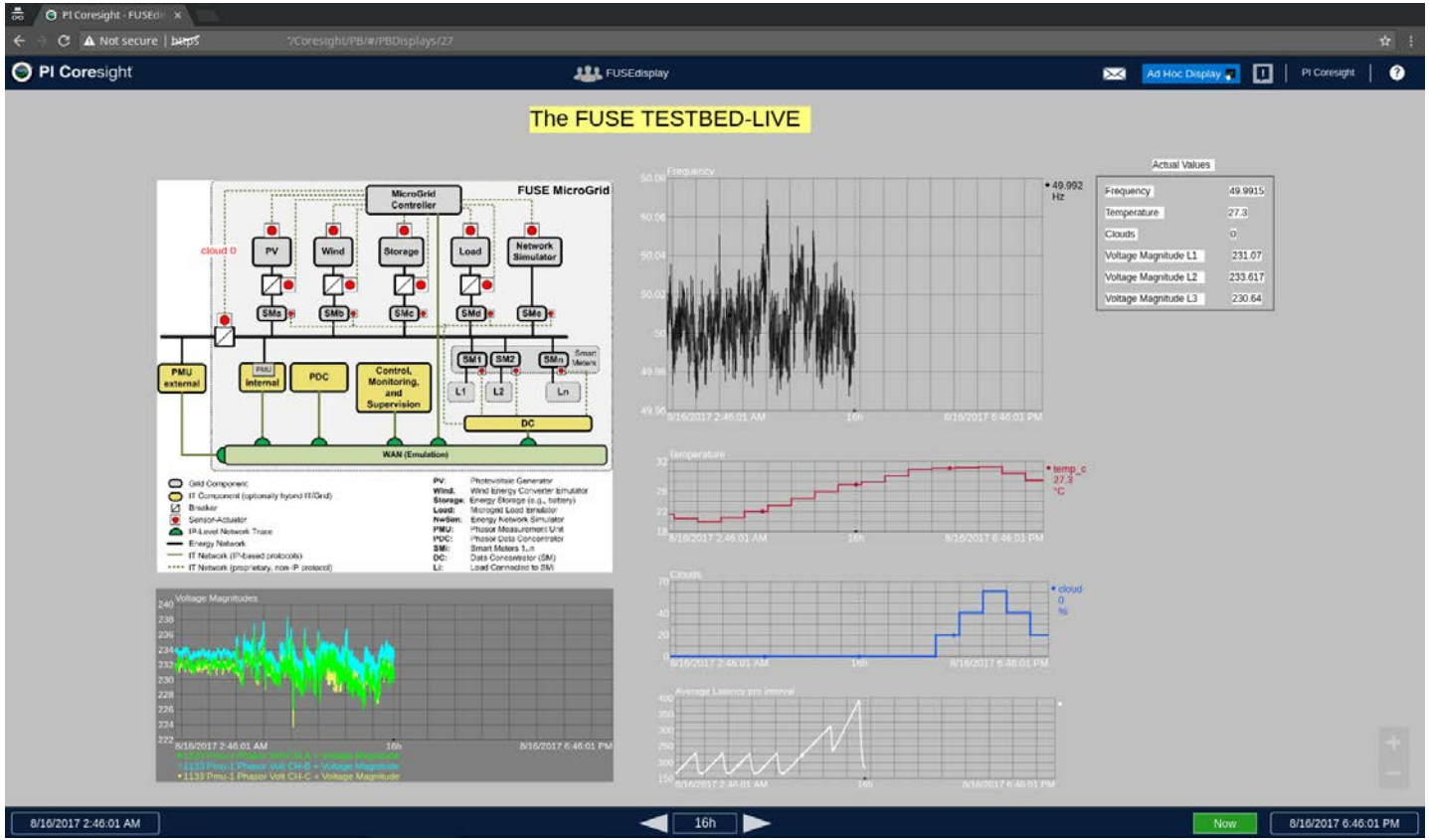

Coresight Display: Details

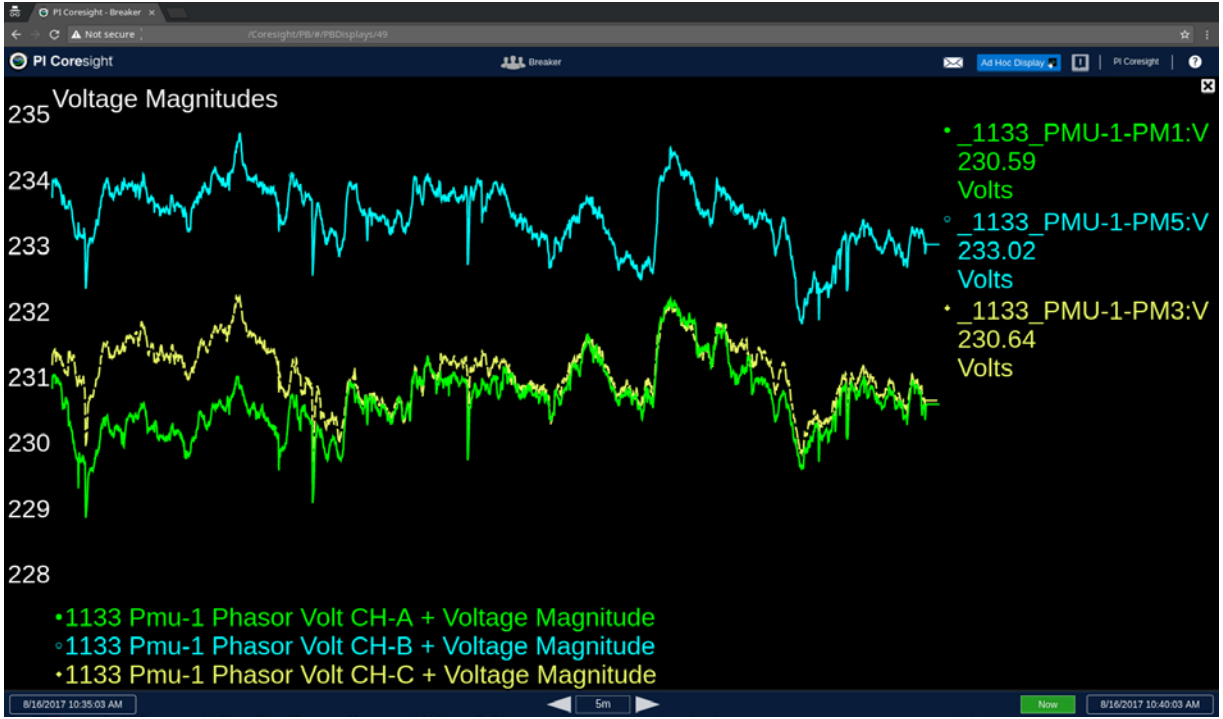

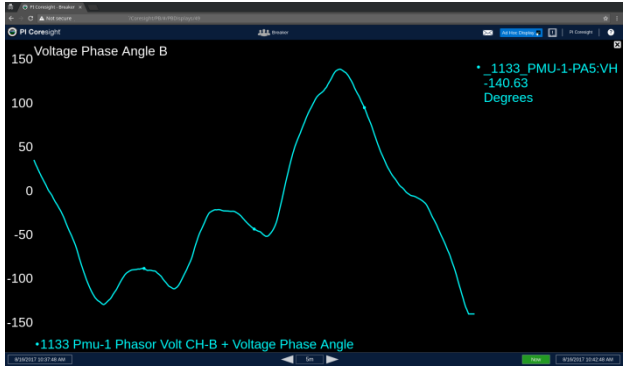

- Phase Angle
- Voltage
- Frequency

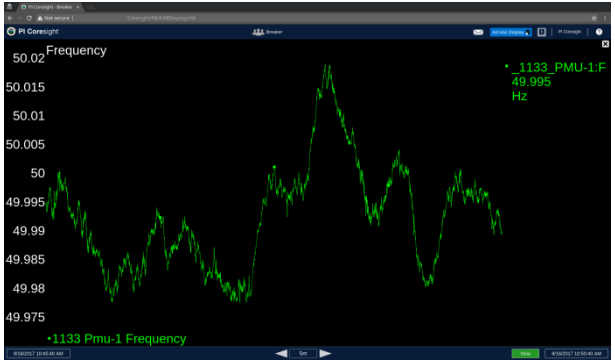

Coresight State Comparison: PMU External vs. Internal

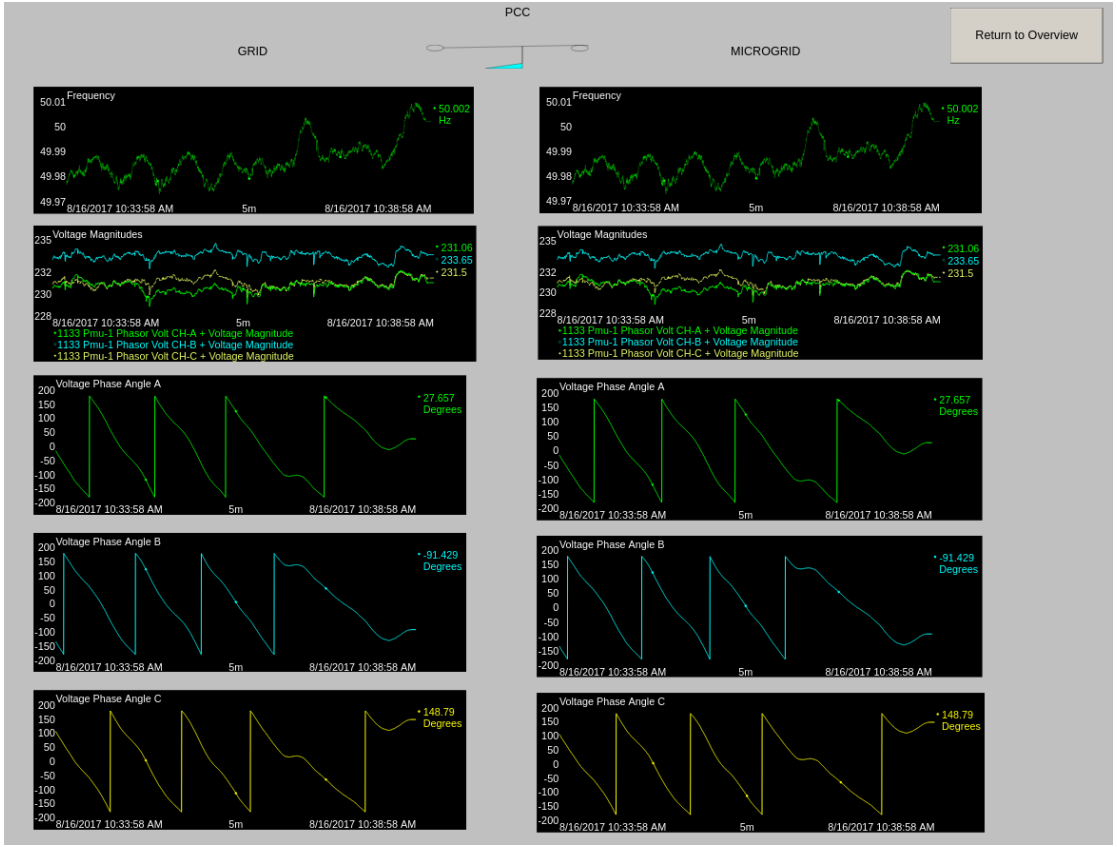

FUSE Allocation of Instances to VMs (or Physical Servers)

- Data Archive
  - Dedicated server
- PDC, Interfaces, AF
  - Dedicated VMs on one physical server
- Coresight, Data Export
  - Dedicated VMs on one physical server
- **Challenge:** traceability

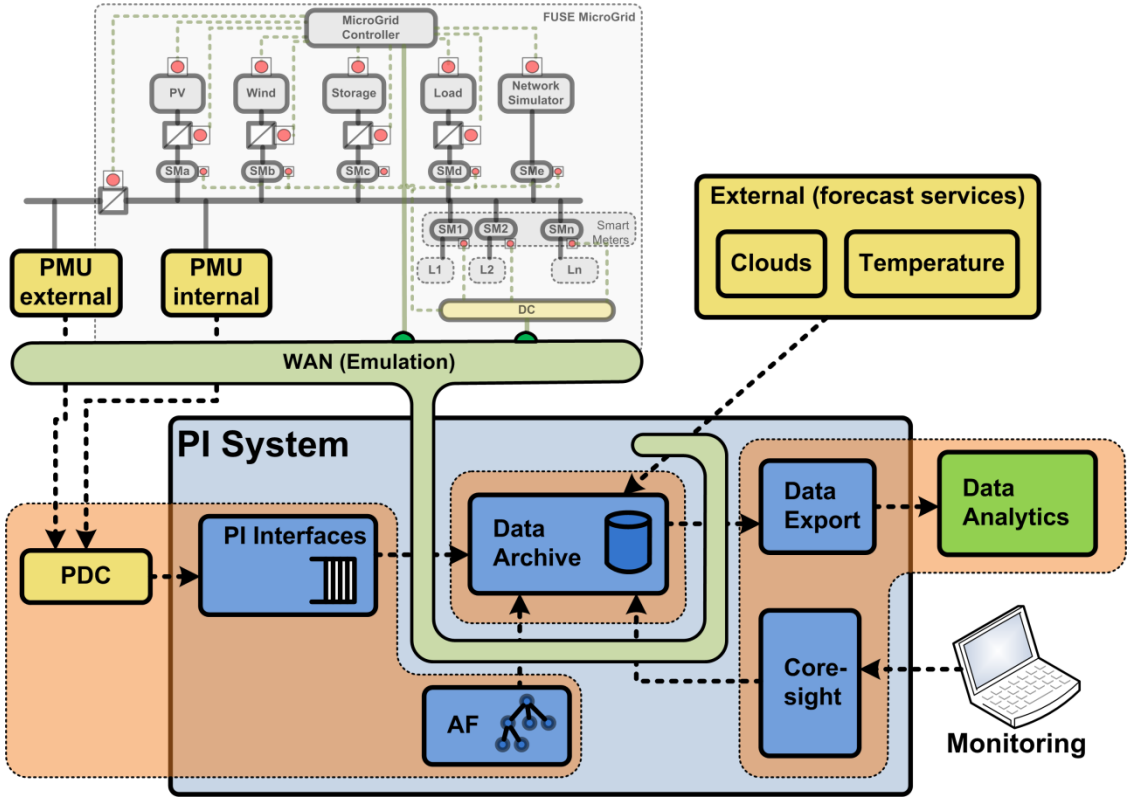

FUSE: Future Work

- **Separate data archives**
  - Fast vs. slow sensor data
- **Combine sensor data**
  - Network traces
  - Sensor values
- **Complex analytics**
- **Feedback loop**

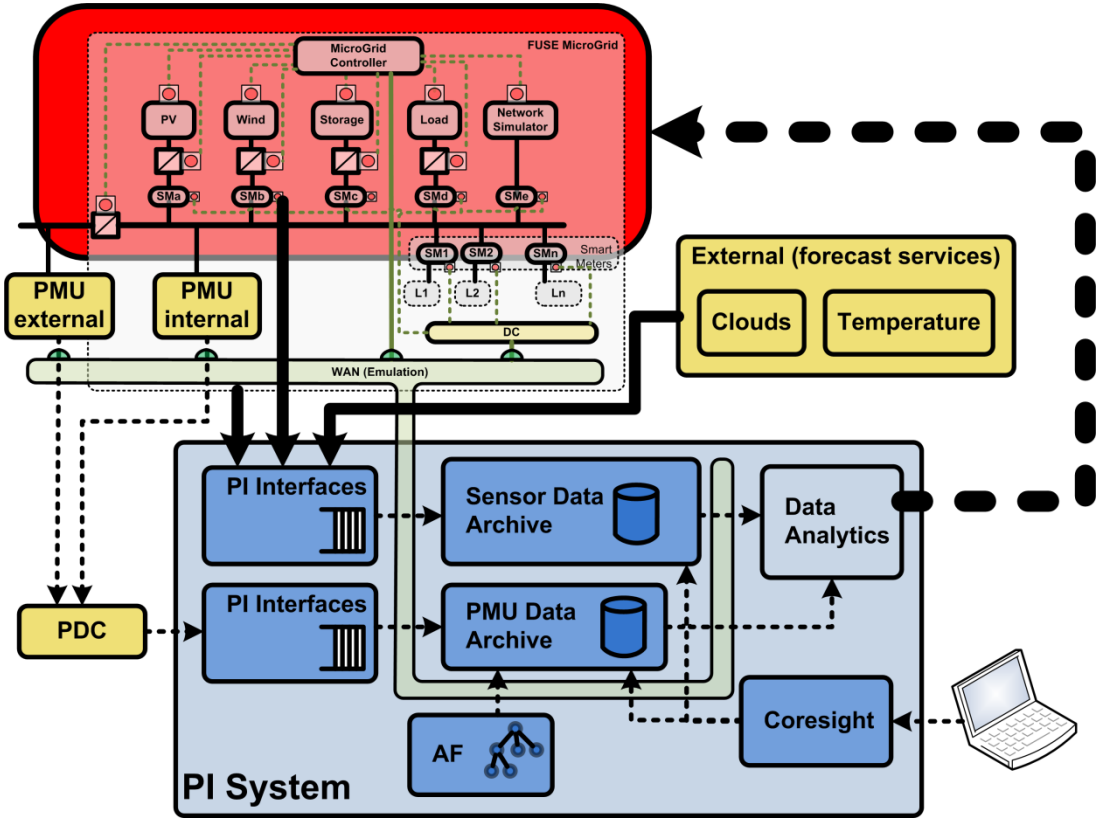

Benefits for Academia: Visualization

- Data archive and export
  - Variety of sensors
- Graphical presentation of research results
  - Key factor (often missing) for „selling“ research results to potential project partners
- Bring research to the classroom

Lessons Learned

- **Academic research is different**
  - Focus on feasibility, traceability, extensibility, ...
  - Project plans change on the fly
- OsiSoft has provided excellent support and guidance
  - OsiSoft trainings highly recommended
  - Challenge: Windows operating system timing (w32time)
    - Use of Windows Server 2016 or later imperative

Leveraging Future Secure Energy Networks: The FUSE project and testbed

COMPANY and GOAL

TU Wien is one of Austria's major universities. Two TU Wien Institutes set up the FUSE testbed as an experimental platform to support research and teaching on secure electrical grids.

TECHNISCHE UNIVERSITÄT WIEN Vienna | Austria

institute of telecommunications

© TU Wien, Thomas Blazina

CHALLENGE

Develop novel algorithms to control decentralized, autonomously operating microgrids as part of the electrical grid

- Centralized power generation vs. renewables in the electrical grid
- Security and resilience aspects
- Main challenge: control break and rejoin operations with grid

SOLUTION

Build a microgrid featuring generators (PV, wind), load, monitoring and control infrastructure

- Experimental platform to test novel architectures and algorithms
- PI System for monitoring
- Future extension: Use PI System to control microgrid operation

RESULTS

First components installed and connected

PI System collecting PMU and sensor data.

- Aiming at real-time feedback and control when testbed is fully set up
- Open issues: achievable reaction time and end-to-end security
- Future: Sensor aggregation and feedback loop

Dr. Joachim Fabini
Joachim.Fabini@tuwien.ac.at
Senior Scientist
Institute of Telecommunications, TU Wien

Prof. Tanja Zseby
Institute of Telecommunications (project lead)
Evangelia Xypolytou
PhD student at Institute of Telecommunications
Prof. Wolfgang Gawlik
Institute of Energy Systems and Electrical Drives
Prof. Manfred Schrödl
Institute of Energy Systems and Electrical Drives

Questions

Please wait for the **microphone** before asking your questions

State your **name & company**

Please remember to…

Complete the Online Survey for this session

감사합니다

Danke

谢谢

Merci

Gracias

Thank You

ありがとう

Спасибо

Obrigado