This article has been accepted for publication in a future issue of this journal, but has not been fully edited. Content may change prior to final publication. Citation information: DOI 10.1109/TSG.2018.2844877, IEEE Transactions on Smart Grid

Sharing solar PV and energy storage in apartment buildings: resource allocation and pricing

Andreas Fleischhacker, *Student Member, IEEE,* Hans Auer, Georg Lettner and Audun Botterud, *Member, IEEE*

***Abstract*—While solar PV generation is well-established on single-family houses, there is still a lack of installations on apartment buildings. To understand the effect of sharing distributed generation, we developed two energy sharing models, a welfare optimization, and a game theoretical (bi-level) model. We introduced two type of players, the owner of distributed generation (e.g. solar PV and energy storage) and the consumers. Furthermore, we included consumer preferences by multiple objectives such as emissions reduction and distributed generation in additions to cost in the model. We applied both models to a numerical example using data from the electricity market in Texas. The results showed that welfare is maximized in both models, but shared differently between the owner of the generation and the consumers. One exception is the bi-level model with uniform price auctions, which results in a reduction in system welfare to maximize owner revenues.**

***Index Terms*—energy sharing, distributed energy resources, solar PV, battery, bi-level optimization, game-theory, Stackelberg game.**

NOMENCLATURE

Sets

$t \in \mathcal{T} = \{1, \ldots, T\}$	Time periods e.g. hours
$i \in \mathcal{I} = \{1, \ldots, N\}$	Consumer

Decision variables

$p^O_{t,i}$	Price for solar PV and battery procurement applied to consumer i
p^U_t	Uniform price for solar PV and battery applied to all consumers
$q^{B_{in}}_{t,i}$	Power flow into the battery
$q^{PV_{grid}}_t$	Power feed (of solar PV generation) into the grid
$q^{B_{grid}}_t$	Power feed (of the battery) into the grid
$q^{PV_{curtail}}_t$	Power curtailment (of solar PV generation)
$q^G_{t,i}$	Power flow from grid to consumer i
$q^{PV}_{t,i}$	Power flow from solar PV plant to consumer i
$q^{B_{out}}_{t,i}$	Power flow from battery to consumer i
$\lambda^L_{t,i}, \lambda^{PV}_{t,i}$	Dual variables of supply = demand and limited solar PV generation constraint
$\mu^{G_{min}}_{t,i}, \mu^{PV_{min}}_{t,i}, \mu^{B_{min}}_{t,i}$	Dual variables of the inequality constraints
SOC_t	Battery state of charge
u^C_i	Utility of consumer i
$costs_i$	Electricity costs of consumer i
$emissions_i$	Emissions caused by the electricity consumption of consumer i
der_i	Electricity generated by distributed energy resources (DER) consumed by consumer i
rev^O	Revenues of DER owner

Parameters

e^G_t	Marginal grid emissions
$p^G_{t,i}$	Price of electricity from the grid
p^{MCP}_t	Wholesale market clearing price
$wtp_{t,i}$	Willingness-to-pay
$q^L_{t,i}$	Load of consumer i
$\bar{q}^B$	Maximum charging and discharging battery power
$\bar{q}^{PV}_t$	Electricity generation of PV plant
w^E_i	Individual weight for emissions of consumer i in $\$/\mathrm{kg}_{\mathrm{CO_2}}$
w^{DER}_i	Individual weight for DER of consumer i in $\$/\mathrm{kWh}^{\mathrm{DER}}$
$\bar{SOC}$	Maximum state of charge
$\underline{SOC}$	Minimum state of charge
SOC^{init}	Initial and end state of charge for period $\mathcal{T}$
η^B	Efficiency factor of the battery

Welfare measures

CS	Consumer surplus
OS	DER owner surplus
US	Utility company surplus
$Loss$	Loss of economic efficiency
BW	Building welfare
TW	Total welfare

A. Fleischhacker, H. Auer and G. Lettner are with the Energy Economics Group, TU Wien, Vienna, Austria.

A. Botterud is with Laboratory for Information and Decision Systems, Massachusetts Institute of Technology, Cambridge, MA, USA and Energy Systems Division, Argonne National Laboratory, Argonne IL, USA.

I. INTRODUCTION

SOLAR generation is one of the key technologies in decarbonizing and decentralizing the energy system. While solar PV on single-family houses is a well-established and integrated solution, there have been relatively few such installations on multi-unit apartment buildings so far. Cities, most of them with a high share of apartment buildings, are becoming the largest energy consumers globally due to the rapid urbanization. Hence, to address the energy-climate challenge innovative solutions are needed to make better use of distributed energy resources (DERs) in urban areas [1].

Although solar PV generation in an urban environment and apartment buildings, in particular, are widely addressed in literature, e.g. in [2], locally generated electricity is often allocated evenly among all consumers in the apartment building. From

This article has been accepted for publication in a future issue of this journal, but has not been fully edited. Content may change prior to final publication. Citation information: DOI 10.1109/TSG.2018.2844877, IEEE Transactions on Smart Grid

a power system planner's perspective, a feasible solution that is easy to implement, but from the consumers perspective, better energy sharing concepts could lead to improved energy resource allocation.

By comparing apartment buildings with single-family houses, we identify many differences: Firstly, multiple consumers (owners/tenants) live in the building; secondly, the consumers have to agree on an energy allocation method, to share the common energy resource (e.g., solar PV, possibly combined with battery storage). Finally, we have to take individual objectives and consumer behavior into account with the possibility of conflicting objectives between different parties. In the following, we will briefly capture the status quo of the literature with respect to (i) energy sharing and pricing concepts for local electricity markets, (ii) frameworks for the interaction among local market participants, (iii) utility of electricity consumer, and (iv) auction designs for local electricity markets, e.g. microgrids (MG).

Many studies in literature [2]–[8] concluded that MG and local energy markets are one of the most preferred ways to facilitate the integration of DERs and solar PV generation in particular. As shown in a comprehensive literature review in [7] local energy markets, where participants rather trade energy amongst themselves, than interacting exclusively with the grid, have the potential to reduce cost and increase renewable penetration rates.

In this paper, we focus on sharing of DERs for a single apartment building. Many approaches aim at matching scattered generation and consumption distributed among multiple parties (such as consumers and prosumers). E.g., [9] uses an agent-based approach to model an energy exchange and shows that agents (acting on behalf of households) can coordinate and regulate the exchange of energy between homes which leads to reductions in the overall battery usage and lower energy losses. [5] introduced a system model of energy sharing management within a microgrid, which considers the profit of the microgrid DER operator and the utility of prosumers. Within the framework of a Stackelberg game, the operator maximizes revenues while the prosumers maximize their individual utilities. As [5] focused on one pricing model only, we will have a look at different pricing and energy allocation algorithms.

Furthermore, we will describe the impact on all involved participants: the owner and consumer of DER as well as the utility company. Therefore, we will introduce welfare parameters in accordance with the literature (e.g., [10]) to explain the effects on the participants.

Interactions and energy exchanges are often modeled as controlled [7] or autonomous operations [11]. As suggested in [5], an entity like an operator is needed to allocate and price local generation. To understand the interactions between multiple participants in local energy markets, cooperative and non-cooperative game theory are regularly used [6], [12], [13].

As discussed above, many studies [14]–[17] are using games (e.g., Stackelberg games) to model the interactions between consumers, prosumers and utility companies. Compared to the existing literature, we are going to develop and discuss different setups of the model, such as different types of ownership. Additionally, we will include solutions for practically implementing the game theoretical models.

As shown in [18] and the non-cooperative and game theoretical decision making problem of each player is formulated as a bi-level optimization problem. Herby, the upper level represents the profit maximization of the player, and the lower level the energy market clearing. Bi-level models and complementarity theory techniques are well-established frameworks to tackle electricity market problems [19], [20]. Bi-level optimization problems are a special kind of optimization problems which require every feasible upper-level solution to satisfy the optimality conditions of a lower-level optimization problem [21].

As many consumers are not only motivated by financial objectives, a consumers utility function is often described by nonlinear and multiple objectives [5], [22]. According to [22], the consumers willingness to pay (WTP) considers comfort benefits and cost-savings as well as the potential valuation of environmental benefits. In this paper, we will compose the consumer utility function by three objectives: cost and emission reduction and degree of DER generation.

Appropriate auction systems are highly relevant to ensure efficient electricity markets and the existence of an economic equilibrium, not only for wholesale but also for local energy markets. The choice between uniform and pay-as-bid pricing for microgrid electricity auctions has been an important issue in electricity markets [23]. We consider two auction systems in our paper: discriminatory and uniform auctions. As stated in [23] we expect different Nash equilibria for both auction systems.

In this article, we propose a framework for sharing DERs within an apartment building. The analysis of different models and cases will help us to identify the best setup for real-life implementation: E.g., if energy communities conduct the investment in DER the requirements may be different than an external investor who seeks for profit maximization. The main contributions of this paper are:

- We will propose a new algorithm for allocation and pricing of DERs in apartment houses. The algorithm may also be implemented for other community shared solar PV and battery projects.
- By solving the resulting games analytically, we will derive solutions for executing the proposed game-theoretical setup practically.
- We will introduce multiple consumer objectives (in addition to monetary motives). By including them in a consumer utility function, we are able to represent different consumer preferences in the model.
- Finally, we will compare multiple pricing mechanisms to illustrate the welfare effects for the DER owner, the consumers and the utility company.

We organize the paper as follows. In Section II, we introduce two possible frameworks for sharing DERs, i.e. solar PV and energy storage, in an apartment house. Section III presents the assumptions and parameterization of a numerical example, while we show comprehensive results in Section IV. Section V discusses and concludes the paper.

This article has been accepted for publication in a future issue of this journal, but has not been fully edited. Content may change prior to final publication. Citation information: DOI 10.1109/TSG.2018.2844877, IEEE Transactions on Smart Grid

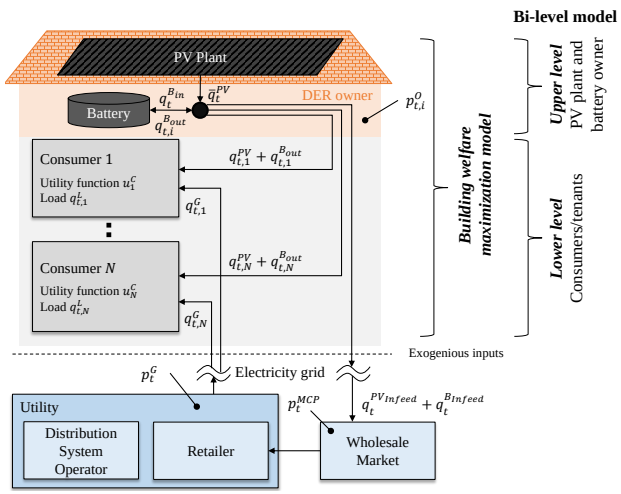

Fig. 1. Graphical representation of building and interaction with utility/wholesale market. The left bracket shows the local welfare optimization model, while the right bracket shows the bi-level model.

II. Methodology

We assume the case of one apartment house. Multiple consumers live in the apartment building, while the owner owns and operates the DER, consisting of solar PV and energy storage[1]. Fig. 1 shows the setup of this case study. The following section describes an optimization framework for sharing the generation of the DER among multiple consumers. The methodology bases on both, optimization and game theoretical models.

Firstly, we introduce a centralized welfare maximization framework for the whole building, which considers conflicting consumer objectives such as costs and emissions reductions as well as the revenues from DERs. Secondly, we formulate a Mathematical Program with Equilibrium Constraints (MPEC) for DER pricing and resource allocation, where we assume that the owner of the DERs is the leader and the consumers the followers in a Stackelberg game. For clarification, the main assumptions of the proposed models are as follows:

- The model addresses optimal allocation and pricing of generation by DER. As this is a question of short-term (operational) dispatch rather than long-term planning, investment decisions and corresponding costs are not part of the modeling framework.
- We assume that the owner of the DERs is fully informed about the consumers preferences, i.e. consumers do not act strategically to influence the pricing and allocation of DERs

A. Consumer utility function

This work takes into account the consumers individual objectives considering multiple criteria. It is challenging for consumers to compare electricity purchases across difference metrics [25]. Therefore, we introduce weight factors w_i^E and w_i^{DER} allowing consumers to express their preferences as a monetary value[2]. Hence, we define consumer is utility function, u_i^C, as the sum of three different objectives[3]

$$u_i^C(q,p) = -costs_i(q,p) - w_i^E emissions_i(q) + w_i^{DER} der_i(q) \tag{1}$$

The weighting factors do not only help us to address multiple objectives, but also allow us to study individual consumer preferences. Firstly, consumers are interested in reducing their energy bill. Secondly, they are interested in reducing emissions and thirdly increasing the share of generation by DER may be a consumer objective, too. The signs for costs and emissions are both negative because most consumers are interested in reducing those terms, while some consumers may also find an increase in generation by DER desirable [30], [31].

Electricity costs for consumer i depend on the costs for grid and distributed consumption, and are formulated as

$$costs_i(q,p) = \sum_{t\in\mathcal{T}} \left(p_{t,i}^G q_{t,i}^G + p_{t,i}^O \left(q_{t,i}^{PV} + q_{t,i}^{B_{out}} \right) \right). \tag{2}$$

The first term is the cost of electricity purchased from the local utility (with price $p_{t,i}^G$) and the second term the cost of generation by DER (with price $p_{t,i}^O$). The second objective of (1) concerns emissions reduction, where we define emissions as

$$emissions_i(q) = \sum_{t\in\mathcal{T}} e_t^G q_{t,i}^G \tag{3}$$

where e_t^G describes the grids (or power markets) marginal emissions. Marginal emissions are defined as the emissions of the price-setting power plant. We use marginal emissions instead of average emissions, because any additional consumption results in an increase of marginal emissions. For an applied example see section III. The third term in the objective function (1) defines the consumers consumption of DER as

$$der_i(q) = \sum_{t\in\mathcal{T}} \left(q_{t,i}^{PV} + q_{t,i}^{B_{out}} \right). \tag{4}$$

In order to properly keep track of DER generation, it is essential that the battery is charged by locally generated electricity (i.e. PV generation), only. Otherwise, it would be possible that the electricity generation from the battery could originate from the grid. Consequentially, we defined the consumers WTP in Theorem 1.

Theorem 1 (Consumer willigness-to-pay): The willingness-to-pay (WTP) for DER of consumer i, characterized by the utility function (1) is given as

$$wtp_{t,i} = p_{t,i}^G + w_i^E e_t^G + w_i^{DER} \tag{5}$$

[1]The DER owner could be all or a sub-set of the consumers or it could be a third party. Both approaches may be implemented practically, e.g., in Austria since the government recently adopted new legislation (see ElWOG 2017 [24]).

[2]The problem of multiple objectives is well studied in literature [3], [26], where one solution is to use the weighted sum method, as explained in [27]. According to the authors, for a priori articulation of preferences, the value of weight must be significant relative to other weights and relative to its corresponding objective function. All three objectives in our model have different units, e.g. $[costs_i] = \$$, $[emissions_i] = \mathrm{kg_{CO2}}$ and $[der_i] = \mathrm{kWh}$. As stated in [28] and [29] multiple objectives or utilities may be summed in the single-dimensional case (e.g. USD). Therefore, we introduce monetary weight factors mapping $\mathrm{kg_{CO2}}$ and kWh to USD

[3]Considering additional objectives, e.g. as illustrated in [25] (other indicators may be energy saving or security-of-supply), may be the subject of future investigations.

This article has been accepted for publication in a future issue of this journal, but has not been fully edited. Content may change prior to final publication. Citation information: DOI 10.1109/TSG.2018.2844877, IEEE Transactions on Smart Grid

The WTP may also be interpreted as the marginal consumer utility. The proof is given in Appendix A.

B. Revenues for DER owner

In practice, potential owners of the DER include the building owner, an external company, or a group of residents. In our proposed model, the owner is defined by a financial objective function only, i.e. to maximize the operating revenues from the DER. Note that investment and operational costs are omitted. The owners revenues are therefore defined as

$$rev^O(q,p) = \sum_{t\in\mathcal{T}}\sum_{i\in\mathcal{N}} p^O_{t,i}(q^{PV}_{t,i} + q^{B_{out}}_{t,i}) + \sum_{t\in\mathcal{T}} p^{MCP}_t (q_t^{PV_{grid}} + q_t^{B_{grid}}) \quad (6)$$

and consist of revenues from selling energy to the consumers within the building or on the wholesale electricity market.

C. Welfare measures

To quantify the economic effects of local generation and energy sharing within the building, we introduce welfare parameters in accordance with [32]. We define consumer surplus (CS), DER owner surplus (OS), and utility company surplus (US)[4] as:

$$CS(q,p) = \sum_{t\in\mathcal{T}}\sum_{i\in\mathcal{N}} \left(\left(wtp_{t,i} - p^O_{t,i}\right)\left(q^{PV}_{t,i} + q^{B_{out}}_{t,i}\right)\right), \quad (7)$$

$$OS(q,p) = rev^O(q,p) = (6) \text{ and} \quad (8)$$

$$US(q,p) = \sum_{t\in\mathcal{T}}\sum_{i\in\mathcal{N}} \left(\left(p^G_{t,i} - p^{MCP}_t\right) q^G_{t,i}\right). \quad (9)$$

Note, that consumers do have a utility by grid consumption (see (1)). The above-defined surplus address changes resulting from DER generation compared to exclusively grid consumption. We also define loss of economic efficiency in the case of scarcity [32] as

$$Loss(q,p) = \sum_{t\in\mathcal{T}}\sum_{i\in\mathcal{N}} \left(\left(wtp_{t,i} - p^O_{t,i}\right) q^G_{t,i}\right). \quad (10)$$

Following this terminology, we assume that building welfare (BW) that accrues to the building (i.e. consumers and DER owner) due to DER is $BW = CS + OS$. Finally, in order to measure the total welfare impacts, we also consider the impact to the utility company as $TW = CS + OS + US$.

D. Building welfare maximisation model

The first model maximizes the value of local generation using a local welfare optimization model as shown Fig. 1 (left). N consumers are described by their utility function u_i and the load $q^L_{t,i}$. The DER owner is assumed to operate in a way to maximize the consumers aggregated utility. Possible revenues from selling electricity to the grid are also included. Excess energy is sold at wholesale market price, p^{MCP}_t, i.e. potential subsidy schemes, e.g., feed-in tariffs or tax credits are neglected in this work. The objective function is building welfare and includes both the consumers utility and the owners revenues. The full model is described in (1a)-(1j):

$$\max_{\left\{q^G_{t,i}, q^{PV}_{t,i}, q^{B_{out}}_{t,i}, q^{B_{in}}_t, q^{B_{out}}_{t,i}, SOC_t\right\}} \quad BW(q,p) = CS(q,p) + OS(q,p) \quad (11a)$$

$$\text{subject to} \quad q^G_{t,i} + q^{PV}_{t,i} + q^{B_{out}}_{t,i} = q^L_{t,i} \quad (\lambda^L_{t,i}) \quad (11b)$$

$$\sum_{t\in\mathcal{N}} q^{PV}_{t,i} + q_t^{PV_{grid}} + q_t^{B_{in}} + q_t^{PV_{curtail}} = \bar{q}^{PV}_t \quad (\lambda^{PV}_t) \quad (11c)$$

$$SOC_t = SOC_{t-1} + q_t^{B_{in}}\eta^B - \sum_{i\in\mathcal{N}} q^{B_{out}}_{t,i}/\eta^B - q_t^{B_{grid}} \quad \forall t \in \mathcal{T}\backslash\{0,T\} \quad (11d)$$

$$SOC_t = SOC^{init} \quad \forall t \in \{0,T\} \quad (11e)$$

$$0 \le \sum_{i\in\mathcal{N}} q^{B_{out}}_{t,i} + q_t^{B_{grid}} \le \bar{q}^B \quad (11f)$$

$$\sum_{i\in\mathcal{N}} q^{B_{out}}_{t,i} + q_t^{B_{grid}} \le SOC_t \quad (11g)$$

$$0 \le q^{B_{in}}_{t,i} \le \bar{q}^B \quad (11h)$$

$$\underline{SOC} \le SOC_t \le \bar{SOC} \quad (11i)$$

$$q^G_{t,i}, q^{PV}_{t,i}, q^{B_{out}}_{t,i}, q^{B_{in}}_t, q^{B_{out}}_{t,i}, SOC_t \in \mathbb{R}^+ \quad (11j)$$

where constraint (11b) ensures that generation and consumption are equal for all periods. PV generation is limited by its maximum hourly availability q^{PV}_t and can be either delivered to consumer i ($q^{PV}_{t,i}$), fed into the grid ($q_t^{PV_{grid}}$) or battery ($q_t^{B_{in}}$) or curtailed ($q_t^{PV_{curtail}}$), as dictated by (11c). Note that curtailment may be the optimal choice in periods where all (participating) consumers are entirely supplied with solar generated electricity, the battery is fully charged, and market prices are negative. Equations (11d)-(11i) describe the batterys integration into the framework, i.e. makes sure that the battery stays within its state of charge and power limits. Finally, all decision variables are limited to positive values (11j), only.

The BW model (11) dispatches DER in a way to maximize the local welfare, considering the surpluses of both consumers and the DER owner. The model finds the optimal allocation of DERs among the consumers. In reality, appropriate price signals are also necessary for the financial settlement between consumers and DER owner, and also to stimulate DER investments. The choice of pricing scheme determines the allocation of BW among consumers and the DER owner. To some extent, the allowable pricing schemes depend on the tariff schemes for electricity delivery. We consider the following four pricing schemes for this model:

- $p^O_{t,i} = 0$: As the operating costs of solar and battery generation are mainly given by investment costs (IC), one could also set the short-term DER price to zero. In this case, to ensure economic viability of DERs, consumers

[4] As we do not have any detailed information about the utility company's cost function, we assume costs are equal to the energy purchases from the wholesale market. Costs related to investment and operation of the network are not considered (which is equivalent to assume that they are constant regardless of the level of DER generation on the building).

would need to pay the IC up front or through annual payments based.

- $p^O_{t,i} = p^G_{t,i}$: From the consumers point of view, the opportunity cost is given by the full retail rate for grid consumption. Settling DERs at this price level could be interpreted as net-metering.
- $p^O_{t,i} = \lambda^{PV}_t$: As the dual variable of the solar PV balance, λ^{PV}_t represents the marginal value of PV generation to the local system, and this could also be used as a price signal. Dual variables are widely used in electricity market models to calculate prices [19].

E. Bi-level model

In the second model, we consider the situation where the DER owner takes advantage of the consumers interest in DERs to increase its own profit. In this case, the question of optimal pricing from the DER owners perspective leads to a non-cooperative game-theoretical model formulation. Towards this end, we introduce a Mathematical Program with Equilibrium Constraints (MPEC) to calculate optimal pricing and energy flows of DERs. Fig. 1 (right bracket) shows the models setup.

A MPEC is an optimization model, whose constraints include other interrelated optimization or complementarity problems [33]. The MPEC in this paper comprises two types of players:

- The DER owner who runs the operation of the PV and battery. The DER owner determines the prices for locally generated electricity, $p^O_{t,i}$, to the building consumers and sells to the grid with the objective to maximize (6).
- The consumers decide if they buy electricity from the DER owner for a given price, or consume electricity from the grid to maximize their individual utility (1).

The electric utility company and the wholesale electricity market are exogenous entities in this framework. For the sake of simplicity, the utility rate for grid consumption p^G_t is assumed to be equal for all consumers in the building.

In the literature, the general setup for this model is known as a Stackelberg game [34]. The leader (i.e. the DER owner) anticipates the reactions of the followers (i.e. the consumers in the building) to the leaders decisions. The leader has a strategic advantage since it is assumed to know the consumers demand curves. Therefore, model (11) may be reformulated as bi-level model:

$$\max_{\substack{\{p^O_{t,i}, p^U_{t,i}\} \\ \{q^G_{t,i}, q^{PV}_{t,i}, q^{B_{out}}_{t,i}\}}} \quad rev^O(q,p) \tag{12a}$$

$$\text{subject to} \quad (11c)-(11i)$$

$$p^O_{t,i} = p^U_t \tag{12b}$$

$$p^O_{t,i}, p^U_{t,i}, q^{B_{in}}_t, q^{B_{out}}_{t,i}, SOC_t \in \mathbb{R}^+ \tag{12c}$$

$$\max_{\{q^G_{t,i}, q^{PV}_{t,i}, q^{B_{out}}_{t,i}\}} \quad u^C_i(q,p) \tag{12d}$$

$$\text{s. t.} \quad (11b) \tag{12e}$$

$$q^G_{t,i}, q^{PV}_{t,i}, q^{B_{out}}_{t,i} \in \mathbb{R}^+ \tag{12f}$$

$$(\mu^{G_{min}}_{t,i}, \mu^{PV_{min}}_{t,i}, \mu^{B_{min}}_{t,i}).$$

The main difference to the BW model is the independent maximization of OS and CS in the upper and lower level problems, and the introduction of new decision variables for prices, $p^O_{t,i}$ and p^U_t. The upper-level problem maximizes the DER owners revenue and includes the same constraints as in the BW model on solar PV generation and energy storage operation, i.e. constraints (11c)-(11i). We consider the cases where the owner sells energy at different prices (discriminatory price auction) or the same price (uniform price auction). The modeling framework is able to capture both auction systems, by activating or deactivating condition (12b).

Each consumer seeks to maximize his utility u_i from consuming electricity, under the restriction of satisfying his demand (11b). The corresponding lower-level problem (12d)-(12f) is linear and continuous. Thus, it can be replaced by its KKT conditions, as shown in [33] and in Appendix B. As the 12 is nonlinear, because of the complementary conditions and a nonlinear objective function, linearization, as described in [20], [33] and Appendix C, is necessary. The linearized problem[5] is

$$\max_{\substack{\{p^O_{t,i}, p^U_{t,i}, q^{B_{in}}_t, q^{B_{out}}_{t,i}, \\ SOC_t, q^G_{t,i}, q^{PV}_{t,i}, q^{B_{out}}_{t,i}, \\ \mu^{G_{min}}_{t,i}, \mu^{PV_{min}}_{t,i}, \mu^{B_{min}}_{t,i}, \lambda^L_{t,i}\}}} \begin{cases} \sum_{t\in\mathcal{T}} \lambda^L_{t,i} q^L_{t,i} \\ -\sum_{t\in\mathcal{T}} p^G_{t,i} q^G_{t,i} \\ +w^{DER}_i \sum_{t\in\mathcal{T}} \left(q^{PV}_{t,i} + q^{B_{out}}_{t,i}\right) \\ +\sum_{t\in\mathcal{T}} p^{MCP}_t (q^{PV_{grid}}_t + q^{B_{grid}}_t) \end{cases} \tag{13a}$$

$$\text{subject to} \quad (11b)-(11i), (12b)-(12f)$$

$$p^G_{t,i} + w^E_i e^G_t - \lambda^L_{t,i} - \mu^{G_{min}}_{t,i} = 0 \tag{13b}$$

$$p^O_{t,i} + w^{DER} - \lambda^L_{t,i} - \mu^{PV_{min}}_{t,i} = 0 \tag{13c}$$

$$p^O_{t,i} + w^{DER} - \lambda^L_{t,i} - \mu^{B_{min}}_{t,i} = 0 \tag{13d}$$

$$q^G_{t,i} + w^E_i e^G_t \geq 0 \ \perp \ \mu^{G_{min}}_{t,i} \geq 0 \tag{13e}$$

$$q^{PV}_{t,i} \geq 0 \ \perp \ \mu^{PV_{min}}_{t,i} \geq 0 \tag{13f}$$

$$q^{B_{out}}_{t,i} \geq 0 \ \perp \ \mu^{B_{min}}_{t,i} \geq 0 \tag{13g}$$

$$\lambda^L_{t,i} \in \mathbb{R} \tag{13h}$$

As stated in [35] an auction is efficient if, in equilibrium, the winner is the consumer with the highest CS, i.e., if consumer i wins. The DER owner is aware of the consumers CS, since w^E_i and w^{DER}_i are known. Therefore, the DER owner is able to calculate the consumers WTP (5) and can charge them accordingly. Theorem 2 states the pricing scheme that maximizes the profit of the DER owner. In the case of a discriminatory auction system, this means that the price applied to consumer i is equal the corresponding $wtp_{t,i}$. Therefore, the consumer with the highest $wtp_{t,i}$ pays the most for DER, followed by the consumer with the second highest valuation, etc. In return, energy will be dispatched according to this order as well.

Theorem 2 (Equilibrium of problem (12) under the assumption of a discriminatory based auction system): i.e., the DER profit-maximizing solution of $p^O_{t,i}$ applied to consumer i at

[5]For the sake of simplicity, complementary conditions are still written in their nonlinear form.

This article has been accepted for publication in a future issue of this journal, but has not been fully edited. Content may change prior to final publication. Citation information: DOI 10.1109/TSG.2018.2844877, IEEE Transactions on Smart Grid

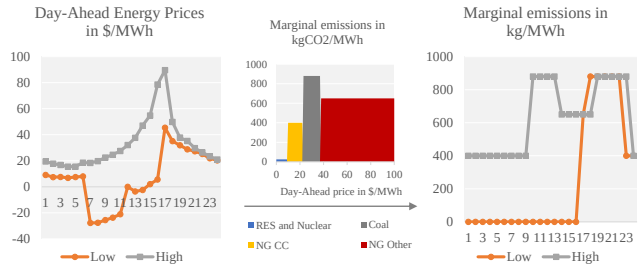

Fig. 2. Relationship between Day-Ahead prices p_t^{MCP} (left) and marginal emissions e_t^G (right) as the result of a merit order relationship (middle).

time t is given by the consumers $wtp_{t,i}$. The proof is given in Appendix D.

The solution of model (12) for uniform auctions is more complex, e.g., see [35], [36]. We developed Algorithm 1 to calculate uniform prices p_t^U that maximizes OS. The idea of this algorithm is to start with all locally generated energy fed into the grid. Iteratively, we update the owner revenues from selling to the building consumers, whereby the consumers are ranked in descending order by their WTP. In the end, the price level that gives the highest revenues to the DER owner will be returned and settled in (12b). Note that algorithm 1 finds the optimal uniform price without the need of solving model (12).

Algorithm 1 Calculation of optimal pricing and revenues for uniform pricing (without battery).

procedure UNIFORMPRICING
  $j \leftarrow 0$ ▷ No consumer is supplied with PV energy.
  $\mathcal{N}' \leftarrow \{0\}$
  $p_{t,0}^O \leftarrow \infty$ ▷ Default pricing value for feed-in, only.
  $rev_{t,0}^O \leftarrow p_t^{MCP} \bar{q}_t^{PV}$ ▷ Valorization on wholesale markets, only.
  for all $j \in \mathcal{N}$ **do** ▷ Sorted descending by $p_{t,i}^O$.
    $\mathcal{N}' \leftarrow \mathcal{N}' \cup \{j\}$ ▷ Update set
    $p_{t,j}^O \leftarrow wtp_{t,j}$
    $q_{t,j}^{PV_{grid}} \leftarrow \bar{q}_t^{PV} - \sum_{k \in \{1,\dots,j\}} q_{t,k}^L$
    ▷ Becomes negative if no surplus energy.
    if $q_{t,j}^{PV_{grid}} > 0$ **then** ▷ Feed-in
      $rev_{t,j}^O \leftarrow \sum_{k \in \mathcal{N}'} p_{t,j}^O q_{t,k}^L + p_t^{MCP} q_{t,j}^{PV_{grid}}$
    else ▷ No feed-in
      $rev_{t,j}^O \leftarrow \sum_{k \in \mathcal{N}' \setminus \{j\}} p_{t,j}^O q_{t,k}^L + p_{t,j}^O (q_{t,j}^L + q_{t,j}^{PV_{grid}})$
      ▷ In the case of $\sum_{k \in \mathcal{N}'} q_{t,k}^L \geq \bar{q}_t^{PV}$ consumer won't be fully supplied.
      break
    end if
  end for
  $i \leftarrow \text{argmax}\left(rev_{t,j}^O\right)$ ▷ Overwrite with optimal results.
  $p_t^U \leftarrow p_{t,i}^O$
  $rev_t^O \leftarrow rev_{t,i}^O$
  $q_t^{PV_{grid}} = \max(q_{t,i}^{PV_{grid}}, 0)$ ▷ Only positive values
  return $p_t^U, rev_t^O, q_t^{PV_{grid}}$
end procedure

III. Numerical Example

To illustrate a potential application of the proposed models, we apply the framework to a numerical example for two illustrative days. We use data from the ERCOT electricity market in Texas. Day-Ahead prices[6] are included as vector p_t^{MCP} for two illustrative days from July 2016:

- **Low price**: July 18th 2016, low (even negative) prices.
- **High price**: July 10th 2016, high prices at noon and afternoon.

Marginal emissions, included by the vector e_t^E. Since marginal emissions are not published by ERCOT we assumed a relationship between Day-Ahead prices and marginal emissions. This approach assumes a static merit order dispatch of the ERCOT market, under the assumption of a gas price of $3\,\$/\text{Mbtu}$ from 2016 [37]. Fig. 2 shows Day-Ahead prices and corresponding marginal emissions for both days[7].

We characterize consumers by their hourly demand vector $q_{t,i}^L$ and their individual weights for emissions reductions, w_i^E, and distributed generation, w_i^{DER}. We use published demand data from NREL [38] of four Texan consumers, located in San Antonio and Corpus Christi for one selected day, i.e. July 1st 2016. The consumers electric load includes electricity demand, heating (space heating and hot water), cooling (HVAC and fans), as well as interior and exterior lights and equipment. We assume the following weight factors to illustrate different consumer preferences: $w_i^E = [0, 7.5, 0, 10]\,\text{ct}/\text{kg}_{\text{CO2}}$ and $w_i^{DER} = [0, 0, 5, 10]\,\text{ct}/\text{kWh}$. The first consumer is interested in cost reduction, only. Consumer 2 and 3 are also interested in emission reduction or increased generation by DER, respectively. Finally, consumer 4 may be labeled as a premium consumer, which is willing to pay for both emissions reduction and DER generation.

We use two different scenarios for the utility rate, $p_{t,i}^G$, paid by consumers for grid electricity[8]:

- **Flat tariff**: The generation charge is $0.059\,\$/\text{kWh}$, while the delivery charge is $0.036\,\$/\text{kWh}$. In total, $p_{t,i}^G = 0.095\,\$/\text{kWh}$. (Source: Southwestern Electric Power Company)
- **Real-time pricing (RTP)**: The generation charge consists of the Day-Ahead wholesale market price plus a generation markup of $0.013\,\$/\text{kWh}$ (Source: Power Smart Pricing). The delivery charge is $0.036\,\$/\text{kWh}$[34]. In total, $p_{t,i}^G = p_t^{MCP} + 0.049\,\$/\text{kWh}$.

DER consists of a PV plant and battery system. We assume that the apartment building has a $100\,\text{m}^2$ roof area. The PV systems installed capacity is $16.6\,\text{kWp}$. We used ERCOT hourly solar generation data, as standardized value for the PV generation, thus $\bar{q}_t^{PV} = \eta_t^{PV} * 16.6\,\text{kWp}$. Storage capabilities are included by two Tesla Powerwalls with a nominal capacity of $SOC = 28\,\text{kWh}$, charging and discharging power of $14\,\text{kW}$ and two-way efficiency of $\eta^B = 95\,\%$ (Source: Tesla).

We implemented both models ((11) and (12)) in the Python modeling framework Pyomo [39] and solved it with the solver Gurobi version 7.0.2 [40].

[6]We used data labelled as "HB_SOUTH", representing the hub in the south load zone.

[7]Hereby, nuclear and renewable generation are the marginal generation resources and set the price up to $10\,\$/\text{MWh}$, natural gas (NG) combined-cycle (CC) up to $23\,\$/\text{MWh}$, coal power plants up to $38\,\$/\text{MWh}$ and NG other beyond $38\,\$/\text{MWh}$. We assume that nuclear and renewable generation does not cause any emissions, while gas CC, coal and peak power plants result in emissions of 440, 880 and $640\,\text{kg}/\text{MWh}$, respectively.

[8]Note that we include volumetric tariff components exclusively without fixed charges, as fixed components are usually small and based on a monthly or annual assessment. Also, electricity rates in Texas are low compared to most other U.S. states.

This article has been accepted for publication in a future issue of this journal, but has not been fully edited. Content may change prior to final publication. Citation information: DOI 10.1109/TSG.2018.2844877, IEEE Transactions on Smart Grid

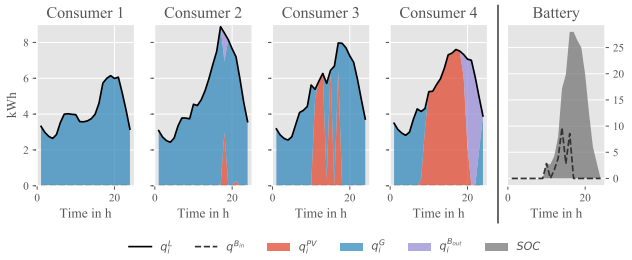

Fig. 3. Allocation of DER (left) and battery SOC as well as charging power (right) for the low price scenario. The battery's discharging power is shown in the left picture in purple (Flat tariff)

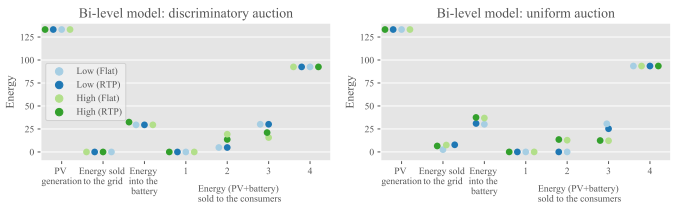

Fig. 4. PV generation sold to the grid, charged to the battery, and sold to consumers.

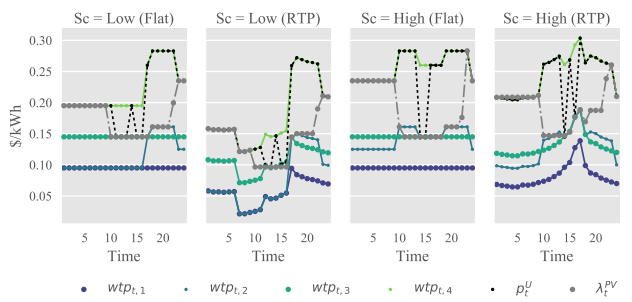

Fig. 5. $wtp_{t,i}$ (bi-level model, discriminatory price auctions), p_t^U (bi-level model, uniform price auctions) and λ_t^{PV} (BW max. model, dual variable) for all scenario combinations.

IV. Results

In this section, we first show how the two models allocate and price energy among the consumers. Secondly, we compare the impacts on social welfare. Finally, we conduct a sensitivity analysis regarding the size of the PV plant.

A. Resource allocation and pricing

The BW maximization model (11) and the bi-level model (12) with discriminatory prices give the same allocation of DERs, as shown in Fig. 3 (left). As consumer 4 always has the highest WTP for DER at any time, the model allocates energy mainly to consumer 4. As consumer 2 and 3 do have different objectives, the energy allocation depends on the systems marginal emissions. As $wtp_{t,i}$ is a function of e_t^G, the consumers WTP changes over time. Hence, consumer preferences concerning emissions are time-dependent, while preferences for DER remain constant. Fig. 3 shows that consumer 2 does not consume much DER. This is because the grid supply also has zero emissions during most of the hours (Fig. 2), making consumer 2 indifferent between grid and local generation.

The algorithm dispatches the battery to maximize BW, resulting in the battery schedule shown in Fig. 3 (right). As mentioned above, most of the electricity is sold to consumer 4, which has the highest WTP during the day.

Fig. 4 shows a comparison of the two different auction systems. Note that the dispatch of solar PV and the battery of the BW maximization model is equal to the bi-level model with discriminatory auctions. Under the bi-level model, PV generation and energy sold to consumer 4 are the same for both auction systems and all scenarios. The owner dispatches the solar PV and the battery in a way to maximize its revenues. Fig. 4 also shows the difference between Flat and RTP pricing. For instance, the DER owner sells energy differently to consumer 2 and 3 depending on the pricing scheme. It is a result of a changed WTP. As stated in Theorem 1, the price of electricity consumption $p_{t,i}^G$ is an input of $wtp_{t,i}$. By adding a real-time based tariff instead of a flat rate, the volatility of $wtp_{t,i}$ increases as well and results in a change in the allocation of energy.

Fig. 4 also shows that the DER owner sells more energy to the grid and less energy to consumers 2 and 3 under the uniform auction scheme. The reason is that in this case the owner prefers to sell to the grid rather than reducing the price (and its revenues) for all consumers. The allocation of welfare for both models and auction systems are discussed in more detail in the next section.

Although the DER allocation is the same with model (11) and (12) with discriminatory price models, there are still differences in resulting prices. Fig. 5 shows the resulting prices of both models for fixed and RTP tariff schemes. For the BW max. model, three of the proposed pricing schemes are based on external assumptions. The third pricing scheme follows from the dual variable λ_t^{PV} of the building PV balance, results in a price that is lower than the prices from the bi-level model.

Here, we focus on the prices that follow from the the bi-level model, which finds optimal pricing from the owners perspective. We find that the consumers are "captives" of the owners pricing scheme. As shown in Fig. 5, the prices of the discriminatory auctions are given by $wtp_{t,i}$, in accordance with Theorem 1. The uniform price under the bi-level model, p_t^U, on the other hand, varies between the different discriminatory price levels in order to maximize the owners revenues taking into account that the prices of all consumers have to be the same. Fig. 5 illustrates why uniform price auctions are less profitable for the DER owner, since the prices are partly below the consumers willingness to pay in this case. Therefore, the uniform auction results in a changed dispatch, as shown in Fig. 4

B. Welfare allocation

The allocation of DER and pricing outcomes influence social welfare outcomes and the distribution of surplus between consumers and the DER owner. Table I shows the value of consumer electricity costs, emissions and welfare measures defined in section II-C for the two allocation models under both price scenarios, low and high.

The BW maximizes the total welfare of the building, but the welfare distribution depends on the pricing scheme. Naturally,

This article has been accepted for publication in a future issue of this journal, but has not been fully edited. Content may change prior to final publication. Citation information: DOI 10.1109/TSG.2018.2844877, IEEE Transactions on Smart Grid

TABLE I
SUMMARY OF WELFARE RESULTS IN THE "HIGH PRICE" (FLAT TARIFF) SCENARIO. RELATIVE CHANGES TO "NO DER" ARE BELOW THE ABSOLUTE VALUES.

		BW maximization (11)			Bi-level model (12)	
	No DER	0	$p^G_{t,i}$	λ^{PV}_t	$wtp_{t,i}$	p^U_t
Total costs	44.9	32.8	44.9	52.7	63.4	61.1
in USD		-27.0%	0.0%	17.3%	41.1%	36.0%
Total emissions	320.9	220.9	220.9	220.9	221.6	232.5
in kg_{CO2}		-31.2%	-31.2%	-31.2%	-31.0%	-27.5%
Total DER gen.	0.0	127.5	127.5	127.5	127.5	118.4
in kWh	-	-	-	-	-	
OS in USD	0.0	0.0	12.1	19.9	30.6	28.1
CS in USD	0.0	30.6	18.4	10.7	0.0	1.6
US in USD	36.8	26.7	26.7	26.7	26.7	27.4
	36.8	57.2	57.2	57.2	57.2	57.1
TW in USD		55.8%	55.8%	55.8%	55.8%	55.4%
	33.8	15.3	15.3	15.3	15.3	16.0
Loss in USD		-54.6%	-54.6%	-54.6%	-54.6%	-52.7%

using the pricing scheme $p^O_{t,i} = 0$ allocates all the BW from DER entirely to the consumers. In contrast, if $p^O_{t,i}$ is set equal to $p^G_{t,i}$ or λ^{PV}_t the welfare is shared among the consumers and the DER owner, with the latter earning a higher surplus under the latter scheme, as summarized in Table I.

The bi-level model, in contrast, aims at maximizing the owners revenues or OS. We observe that under the discriminatory pricing, the DER owner fully exploits the consumers WTP for higher costs by setting prices accordingly, as the consumers are "captives" of the owner. Hence, all the surplus from DER goes to the DER owner, whereas the consumer utility, as the sum of costs, emissions, and DER, does not change compared to the case without DER ($CS = 0$).

Not surprisingly, Table I shows that the CS is marginally higher under uniform price auctions, while the owners revenues are higher for discriminatory price auctions. As a result of uniform price auctions, total welfare losses increases by $1.9\,\%$ (high price scenario) compared to all the other cases with DER. As discussed previously, the welfare losses are the result of artificial scarcity (by selling to the market rather than to consumers), as the owner is willing to accept inefficiency in energy allocation in order to maximize it's revenues.

C. Sensitivity analysis regarding the solar power capacity

So far, the analysis has considered a fixed size of the PV/battery system. Results from Fig. 6 shows the results of a sensitivity analysis regarding the PV plant size. The implemented pricing mechanism determines how BW is shared between consumers and the DER owner. The saturation effect in Fig. 6 occurs when there is a distinct switch from supplying DER to consumers to selling to the wholesale market. An interesting observation is that under the λ^{PV}_t pricing scheme for the BW model, the DER owner benefits the most up to an installed capacity of about 30kWp, but there is a distinct switch towards a higher CS after exceeding the threshold. The explanation is that the dual variable λ^{PV}_t, which represents the marginal value of solar generation, is set by the consumers WTP or the wholesale market. By increasing the PV plant size, this value is mostly defined by the market price p^{MCP}_t.

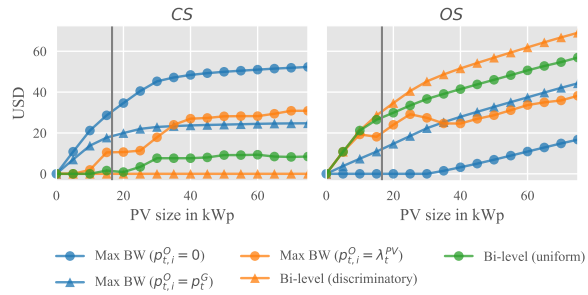

Fig. 6. Sensitivity analysis regarding the maximum PV plant size The vertical line shows the plant size of the previous investigation (16.6 kWp).

In contrast, the $p^O_{t,i} = p^G_t$ pricing scheme results in increase CS and OS as a function of the solar PV size, although the growth rate is lower when PV capacity exceeds 30kW.

V. CONCLUSIONS

To address the question of energy allocation and pricing of DER in an apartment building, we developed two different models, where consumer preferences are characterized by multiple objectives such as emissions reduction and on-site-generation in additions to cost. While the first model maximizes the total local welfare of the building, the second model assumes that the DER owner acts strategically in a game theoretical (bi-level) model to increase its revenue. Both models (11) and (12) are efficient in the sense that the consumers that place the highest value on DERs are served first, followed by the consumer with the second highest valuation, etc.

The results showed that the optimization of building welfare allocates energy identically to the bi-level model with a discriminatory price auction. The introduction of prices determine how the building welfare from DERs is shared between the consumers and the DER owner. As this paper presented multiple pricing schemes, the situation, in reality, may depend on the affiliation between owner and consumers (e.g., ownership models). For practical implementation, both models are suitable: The BW maximization makes intuitive sense for a community shared battery and solar project, where owners may also be consumers. In contrast, an external investor is interested in maximizing the investment's rate-of-return, making the bi-level model a more attractive option. If the bi-level model reveals the consumers' true preferences and WTP, the results show that the economics of DER as well as the owner's surplus may be increased. In turn, this improves the economics of DER and may stimulate additional investments in DERs.

As we used solar PV as a representative technology for renewable DER and the battery as one for storage technologies, our proposed model may also be applied to other community energy systems. We see multiple directions for future research, including the consideration of investment decisions, also factoring in the effects of uncertainty (e.g. in terms of future demand for DERs). Furthermore, an important model extension is to include strategic behavior of individual consumers with the goal of lowering the DER price and hide their WTP.

This article has been accepted for publication in a future issue of this journal, but has not been fully edited. Content may change prior to final publication. Citation information: DOI 10.1109/TSG.2018.2844877, IEEE Transactions on Smart Grid

APPENDIX A
PROOF OF THE CONSUMER WILLINGNESS-TO-PAY

The utility function of the consumers u_i is concave with respect to consumption q. For any price $p^O_{t,i}$ set by the owner, each consumer i will choose the consumption of local generation $q^O_{t,i} = q^{PV}_{t,i} + q^{B_{out}}_{t,i}$ and grid $q^G_{t,i}$ that maximizes his utility (1). For price $p^O_{t,i}$ set by the owner, each consumer has an unique energy consumption to satisfy his demand $q^L_{t,i}$, whereas $q^G_{t,i} = q^L_{t,i} - q^O_{t,i}$. By substituting $q^G_{t,i}$ in (1) and deriving, u_i to $q^O_{t,i}$ we can define the consumers WTP for locally generated electricity stated in (5). □

APPENDIX B
REFORMULATION BY KKT CONDITIONS

As described in [33] any MPEC can be formulated as a mathematical optimization problem constrained by another one as:

$$\min_{\substack{\{x\}\\ \{y,\lambda,\mu\}}} \quad f(x,y,\lambda,\mu) \tag{14a}$$
$$\text{s.t} \quad h(x,y,\lambda,\mu) = 0 \tag{14b}$$
$$g(x,y,\lambda,\mu) \leq 0 \tag{14c}$$
$$\min_{\{y,\lambda,\mu\}} \quad f^L(x,y) \tag{14d}$$
$$\text{s.t.} \quad h^L(x,y) = 0 \quad (\lambda) \tag{14e}$$
$$g^L(x,y) \leq 0 \quad (\mu) \tag{14f}$$

We solve the MPEC exposed in this paper by reformulating the upper-level problem as an equivalent optimization problem. Therefore, the KKT optimality conditions of the lower-level problem will be implemented in the first level, as follows:

$$\min_{\substack{\{x\}\\ \{y,\lambda,\mu\}}} \quad f(x,y,\lambda,\mu) \tag{15a}$$
$$\text{s.t} \quad h(x,y,\lambda,\mu) = 0 \tag{15b}$$
$$g(x,y,\lambda,\mu) \leq 0 \tag{15c}$$
$$\nabla_y f^L(x,y) + \lambda \nabla_y h^L(x,y) + \mu \nabla_y g^L(x,y) = 0 \tag{15d}$$
$$h^L(x,y) = 0 \tag{15e}$$
$$g^L(x,y) \leq 0 \ \perp \ \mu \geq 0 \tag{15f}$$

By introducing the Lagrangian as

$$\mathcal{L}\left(q^G_{t,i}, q^{PV}_{t,i}, q^{B_{out}}_{t,i}, \lambda^L_{t,i}, \mu^{G_{min}}_{t,i}, \mu^{PV_{min}}_{t,i}, \mu^{B_{min}}_{t,i}\right) \tag{16a}$$
$$= -\sum_{t\in\mathcal{T}} \tilde{p}^G_{t,i} q^G_{t,i} - \sum_{t\in\mathcal{T}} \tilde{p}^O_{t,i}(q^{PV}_{t,i} + q^{B_{out}}_{t,i}) \tag{16b}$$
$$- \lambda^L_{t,i}\left(q^G_{t,i} + q^{PV}_{t,i} + q^{B_{out}}_{t,i} - q^L_{t,i}\right) \tag{16c}$$
$$- \mu^{G_{min}}_{t,i} q^G_{t,i} - \mu^{PV_{min}}_{t,i} - \mu^{B_{min}}_{t,i} \tag{16d}$$

the lower levels optimization problem could be rewritten by its KKT conditions in the form

$$\partial\mathcal{L}/\partial q^G_{t,i} = \tilde{p}^G_{t,i} - \lambda^L_{t,i} - \mu^{G_{min}}_{t,i} = 0 \tag{17a}$$
$$\partial\mathcal{L}/\partial q_{t,i} = \tilde{p}^O_{t,i} - \lambda^L_{t,i} - \mu^{PV_{min}}_{t,i} = 0 \tag{17b}$$
$$\partial\mathcal{L}/\partial q^{B_{out}}_{t,i} = \tilde{p}^O_{t,i} - \lambda^L_{t,i} - \mu^{B_{min}}_{t,i} = 0 \tag{17c}$$
$$\partial\mathcal{L}/\partial \lambda^L_{t,i} = q^G_{t,i} + q^{PV}_{t,i} + q^{B_{out}}_{t,i} - q^L_{t,i} = 0 \tag{17d}$$
$$q^G_{t,i} \geq 0 \ \perp \ \mu^{G_{min}}_{t,i} \geq 0 \tag{17e}$$
$$q^{PV}_{t,i} \geq 0 \ \perp \ \mu^{PV_{min}}_{t,i} \geq 0 \tag{17f}$$
$$q^{B_{out}}_{t,i} \geq 0 \ \perp \ \mu^{B_{min}}_{t,i} \geq 0 \tag{17g}$$

APPENDIX C
LINEARIZATION

The MPEC model (2) includes the following nonlinearities:

- the complementarity conditions and
- the term $p^O_{t,i}(q^{PV}_{t,i} + q^{B_{out}}_{t,i})$ (prices times quantity, both are decision variables) in the objective function.

Complementarity conditions can be linearized using the well-known linear expressions proposed in [20]. In this work, we used SOS1 constraints to formulate the complementary conditions [39]. The strong duality condition and some of the KKT conditions allows us to re-formulate the lower levels objective (similar to the problem formulated in [20]). It says that if a problem is convex, the objective functions of the primal and dual problems have the same value at the optimum. Thus the lower levels primal objective (12d) equal to it's dual objective. $f^{L,Dual}_i = -\sum_{t\in\mathcal{T}} \lambda^L_{t,i} q^L_{t,i}$ Substituting those two equations allows us to calculate the nonlinearity of the upper level as a linear expression (13a).

APPENDIX D
PROOF OF SOLUTION FOR PRICE DISCRIMINATION

The owner (leader in the Stackelberg game) maximizes revenues by selling electricity to consumers and the grid and sets the price for local generation $p^O_{t,i}$. As stated in [5] (Definition 1), model (12) reaches the Stackelberg Equilibrium, if all players obtain the optimal solutions, including all consumers and the owner. Thereby, it is evident that the proposed framework reaches an Equilibrium as soon as the owner is able to find optimized $p^O_{t,i}$ and the consumers choose their consumption. As the owner is able to identify all consumers demand curve, he is able to exercise market power. Therefore, optimal pricing, from the owners perspective under the assumption of a discrimination auction, is equal to the consumers WTP (5). Indicating the fact, that the market price p^{MCP}_t is lower than the utility rate $p^G_{t,i}$, it is favorable to sell electricity firstly to consumers, secondly stored in the battery and thirdly sell it to the grid. □

ACKNOWLEDGMENT

This project has received funding from the European Unions Horizon 2020 research and innovation programme under grant agreement N691689 (Best practices and implementation of innovative business models for Renewable Energy aggregatorS, BestRES).

REFERENCES

[1] IEA, "Energy Technology Perspectives 2016: Towards Sustainable Urban Energy Systems," 75739 Paris Cedex 15, France.

[2] G. Comodi, A. Giantomassi, M. Severini, S. Squartini, F. Ferracuti, A. Fonti, D. Nardi Cesarini, M. Morodo, and F. Polonara, "Multi-apartment residential microgrid with electrical and thermal storage devices: Experimental analysis and simulation of energy management strategies," *Applied Energy*, vol. 137, pp. 854–866, 2015. [Online]. Available: http://www.sciencedirect.com/science/article/pii/S030626191400751X

[3] K. Dehghanpour and H. Nehrir, "Real-Time Multiobjective Microgrid Power Management Using Distributed Optimization in an Agent-Based Bargaining Framework," *IEEE Transactions on Smart Grid*, p. 1, 2017.

[4] N. Li, L. Chen, and M. A. Dahleh, "Demand Response Using Linear Supply Function Bidding," *IEEE Transactions on Smart Grid*, vol. 6, no. 4, pp. 1827–1838, 2015.

[5] N. Liu, X. Yu, C. Wang, and J. Wang, "Energy Sharing Management for Microgrids With PV Prosumers: A Stackelberg Game Approach," *IEEE Trans. Ind. Inf.*, vol. 13, no. 3, pp. 1088–1098, 2017.

[6] W. Saad, Z. Han, H. Poor, and T. Basar, "Game-Theoretic Methods for the Smart Grid: An Overview of Microgrid Systems, Demand-Side Management, and Smart Grid Communications," *IEEE Signal Processing Magazine*, vol. 29, no. 5, pp. 86–105, 2012.

[7] M. Stadler, G. Cardoso, S. Mashayekh, T. Forget, N. DeForest, A. Agarwal, and A. Schönbein, "Value streams in microgrids: A literature review," *Applied Energy*, vol. 162, pp. 980–989, 2016.

[8] Y. Xu, W. Zhang, G. Hug, S. Kar, and Z. Li, "Cooperative Control of Distributed Energy Storage Systems in a Microgrid," *IEEE Transactions on Smart Grid*, vol. 6, no. 1, pp. 238–248, 2015.

[9] M. Alam, S. D. Ramchurn, and A. Rogers, Eds., *Cooperative energy exchange for the efficient use of energy and resources in remote communities*. International Foundation for Autonomous Agents and Multiagent Systems, 2013.

[10] B.-A. Moshe, "Transportation Systems Analysis: Demand and Economics," Fall 2008. [Online]. Available: https://ocw.mit.edu/courses/civil-and-environmental-engineering/1-201j-transportation-systems-analysis-demand-and-economics-fall-2008/

[11] G. Wang, Q. Zhang, H. Li, B. C. McLellan, S. Chen, Y. Li, and Y. Tian, "Study on the promotion impact of demand response on distributed PV penetration by using non-cooperative game theoretical analysis," *Applied Energy*, vol. 185, pp. 1869–1878, 2017.

[12] C. O. Adika and L. Wang, "Non-Cooperative Decentralized Charging of Homogeneous Households' Batteries in a Smart Grid," *IEEE Transactions on Smart Grid*, vol. 5, no. 4, pp. 1855–1863, 2014.

[13] A. H. Mohsenian-Rad, Wong, V. W. S., J. Jatskevich, R. Schober, and A. Leon-Garcia, "Autonomous Demand-Side Management Based on Game-Theoretic Energy Consumption Scheduling for the Future Smart Grid," *IEEE Transactions on Smart Grid*, vol. 1, no. 3, pp. 320–331, 2010.

[14] C. P. Mediwaththe, E. R. Stephens, D. B. Smith, and A. Mahanti, "A Dynamic Game for Electricity Load Management in Neighborhood Area Networks," *IEEE Transactions on Smart Grid*, vol. 7, no. 3, pp. 1329–1336, 2016.

[15] O. Kilkki, A. Alahaivala, and I. Seilonen, "Optimized Control of Price-Based Demand Response With Electric Storage Space Heating," *IEEE Transactions on Industrial Informatics*, vol. 11, no. 1, pp. 281–288, 2015.

[16] A. Mondal, S. Misra, and M. S. Obaidat, "Distributed Home Energy Management System With Storage in Smart Grid Using Game Theory," *IEEE Systems Journal*, vol. 11, no. 3, pp. 1857–1866, 2017.

[17] X. Wu, X. Hu, X. Yin, and S. Moura, "Stochastic Optimal Energy Management of Smart Home with PEV Energy Storage," *IEEE Transactions on Smart Grid*, p. 1, 2016.

[18] Y. Fan, D. Papadaskalopoulos, and G. Strbac, "A game theoretic modeling framework for decentralized transmission planning," in *2016 Power Systems Computation Conference (PSCC)*. IEEE, 2016, pp. 1–7.

[19] A. Ortner, C. Graf, and D. Huppmann, "Modeling competitive equilibrium prices for energy and balancing capacity in electricity markets involving non-convexities," *Working paper*, 2017.

[20] C. Ruiz and A. J. Conejo, "Pool Strategy of a Producer With Endogenous Formation of Locational Marginal Prices," *IEEE Transactions on Power Systems*, vol. 24, no. 4, pp. 1855–1866, 2009.

[21] A. Sinha and K. Deb, "Bilevel Multi-Objective Optimization and Decision Making," in *Metaheuristics for Bi-level Optimization*, ser. Studies in Computational Intelligence, E.-G. Talbi, Ed. Berlin, Heidelberg: Springer Berlin Heidelberg, 2013, vol. 482, pp. 247–284.

[22] S. Banfi, M. Farsi, M. Filippini, and M. Jakob, "Willingness to pay for energy-saving measures in residential buildings," *Energy Economics*, vol. 30, no. 2, pp. 503–516, 2008.

[23] G. Federico and D. Rahman, "Bidding in an electricity pay-as-bid auction," *Submitted to the Blue Ribbon Panel of the California Power Exchange*, 2000.

[24] Austrian Federal Chancellery, "Federal Act Providing New Rules for the Organisation of the Electricity Sector: ElWOG 2010."

[25] S. Karjalainen, "Consumer preferences for feedback on household electricity consumption," *Energy and Buildings*, vol. 43, no. 2-3, pp. 458–467, 2011.

[26] N. I. Nwulu and X. Xia, "Multi-objective dynamic economic emission dispatch of electric power generation integrated with game theory based demand response programs," *Energy Conversion and Management*, vol. 89, pp. 963–974, 2015.

[27] R. T. Marler and J. S. Arora, "The weighted sum method for multi-objective optimization: new insights," *Structural and Multidisciplinary Optimization*, vol. 41, no. 6, pp. 853–862, 2010.

[28] P. C. Fishburn, "Additive utilities with finite sets: Applications in the management sciences," *Naval Research Logistics Quarterly*, vol. 14, no. 1, pp. 1–13, 1967.

[29] E. Triantaphyllou and P. M. Parlos, *Multi-criteria decision making methods: A comparative study*, ser. Applied optimization. Dordrecht: Kluwer Academic Publishers, 2010, vol. v. 44.

[30] J. Peck, "Econ 501.02 - Intermediate Microeconomic Theory: Preferences and Utility Functions." [Online]. Available: http://www.econ.ohio-state.edu/jpeck/Econ501aL3.pdf

[31] A. Wolitzky, "14.121 Microeconomic Theory I: Lecture 8: Expected Utility Theory."

[32] S. Callan and J. Thomas, *Environmental Economics and Management: Theory, Policy and Applications*. Cengage Learning, 2006. [Online]. Available: https://books.google.at/books?id=ANWPlfqX0yQC

[33] S. A. Gabriel, A. Conejo, D. Fuller, Hobbs B., and Ruiz C., *Complementarity modeling in energy markets*. New York, NY: Springer New York and Imprint: Springer, 2013.

[34] H. von Stackelberg, *Market Structure and Equilibrium*. Berlin, Heidelberg: Springer Berlin Heidelberg, 2011.

[35] E. S. Maskin, "Auctions, development, and privatization: Efficient auctions with liquidity-constrained buyers," *European Economic Review*, vol. 44, no. 4-6, pp. 667–681, 2000.

[36] C. Borgs, J. Chayes, N. Immorlica, M. Mahdian, and A. Saberi, Eds., *Multi-unit Auctions with Budget-constrained Bidders*, 2005. [Online]. Available: https://www.microsoft.com/en-us/research/publication/multi-unit-auctions-budget-constrained-bidders/

[37] J. D. Rhodes, M. E. Webber, T. Deetjen, and T. Davidson, "Are solar and wind really killing coal, nuclear and grid reliability?" May 12, 2017. [Online]. Available: https://theconversation.com/are-solar-and-wind-really-killing-coal-nuclear-and-grid-reliability-76741

[38] N. Blair, A. Dobos, J. Freeman, T. Neises, M. Wagner, T. Ferguson, P. Gilman, and S. Janzou, "System Advisor Model, SAM 2014.1.14: General Description: NREL/TP-6A20-61019." [Online]. Available: http://www.nrel.gov/docs/fy14osti/61019.pdf

[39] W. E. Hart, C. D. Laird, J.-P. Watson, D. L. Woodruff, G. A. Hackebeil, B. L. Nicholson, and J. D. Siirola, *Pyomo – Optimization Modeling in Python*, 2nd ed., ser. SpringerLink : Bücher. Cham: Springer, 2017.

[40] Gurobi Optimization Inc., "Gurobi Optimizer Reference Manual," 2016. [Online]. Available: http://www.gurobi.com

Andreas Fleischhacker Andreas Fleischhacker is a research associate and Ph.D. candidate at the Energy Economics Group at the Technical University of Vienna. He received a B.Sc. degree in Electrical Engineering and an M.Sc. degree in Automation Engineering from Technical University of Vienna. He joined the Energy Economics Group in October 2013 as a project assistant where he participates in international and national research projects. In 2017 he visited MIT/LIDS for joint research. His research interests in Energy Economics include modeling and optimization of sustainable energy systems under consideration of hybrid grid structures as well as energy sharing concepts for distributed generation.

Hans Auer Hans Auer is an Associate Professor in Energy Economics at Technical University of Vienna, Austria. He received a M.Sc. in Electrical Engineering (1996), a Ph.D (2000) and Venia Docendi (2012) in Energy Economics from Technical University of Vienna. Since the beginning of his academic career he has been focusing in research and teaching on various aspects of electricity market modeling and design, notably in the context of grid and market integration of renewable energy and storage technologies.

Georg Lettner Georg Lettner Georg Lettner joined the Energy Economics Group at the Technical University of Vienna in 2009. Georg is Group Leader for Business Development in Smart Grids, Smart Cities and E-Mobility. He is a key Senior Expert in grid and market integration of distributed generation and renewable generation technologies and Smart-Grids concepts. Georg's research interests are focused on tailor-made simulation software development in this context, with special consideration of the economic interactions between the different stakeholders (business models). In recent years Georg contributed to many research and consulting projects for the energy industry.

Audun Botterud Dr. Audun Botterud is a Principal Research Scientist in Laboratory for Information and Decision Systems (LIDS) at Massachusetts Institute of Technology (MIT) (since 2016) and a Principal Energy Systems Engineer in the Center for Energy, Environmental, and Economic Systems Analysis at Argonne National Laboratory (since 2005). He received a M.Sc. in Industrial Engineering (1997) and a Ph.D. in Electrical Power Engineering (2004), both from the Norwegian University of Science and Technology. He was previously with SINTEF Energy Research in Trondheim, Norway. His research interests include power system planning and operation, electricity markets, energy economics, grid integration of renewable energy, energy storage, and stochastic optimization. He is the co-chair of the IEEE Task Force on Bulk Power System Operations with Variable Generation.