NEW METHOD FOR THE PRODUCTION OF DECK SLABS OF STEEL-CONCRETE-COMPOSITE BRIDGES

Kerstin Fuchs[1] and Johann Kollegger[2]
[1]PhD candidate, [2]Professor
Institute for Structural Engineering, TU Wien

Abstract

A patent was granted recently to TU Wien for a new method for the erection of deck-slabs. The innovative feature of this new method consists in the combination of the advantages of in-situ construction using a formwork carriage and production methods with partial-depth elements. Precast elements for a section of the deck slab with a length of for example 25m are placed at an assembly area. Reinforcement is placed on top of the precast elements. Than a carriage, which can travel along the whole length of the bridge like in the case of a formwork carriage, is moved to the assembly area. The precast elements are fixed to the carriage and then lifted by approximately 400 mm. In the next step the precast elements are transported to the location where they have to be placed and an in-situ concrete layer is added on top of the elements. When the in-situ concrete has gained enough strength, the precast elements, which serve as a lost formwork but also become a load carrying part of the deck slab, are detached from the carriage. Then the carriage is moved to the assembly area to pick up the elements for the next section of the deck slab. The essential advantage of this innovative construction method for the production of slabs for bridges is the reduction of construction time and the production of a deck slab with the same quality like an in-situ concrete slab.

Keywords: Deck slabs, Bridge structures, Precast elements

1 Introduction

Deck slabs of steel-concrete-composite bridges can either be produced by cast in-situ concrete or by placing precast concrete elements. An example where the deck slab is cast in-situ is shown in Fig. 1. The formwork of the deck slab is supported by a formwork carriage. Placing of the reinforcement takes place at the installation site. Typically a weekly cycle can be achieved for a 20m to 25m section of the deck slab. Transverse construction joints are created between the slab sections. The formwork carriage can be moved longitudinally along the bridge. In the example shown in Fig. 1 two formwork carriages were used in order to reduce the construction time.

Fig. 1 Production of a deck slab using a formwork carriage (© Doka)

A faster construction of the deck slab is possible, if full depth precast elements are used. Fig. 2 shows an example where full depth precast elements are placed on transverse steel girders. In this example [Jung et al. 2009] a crawler crane was used to install the precast elements. If the bridge deck is located at a great height above the ground or if the ground conditions do not permit the usage of a crane, installation machines can be used to place the precast elements. Examples of the production of the deck slab with installation machines are shown in [Members of SETRA 2010]. One drawback of the usage of full depth precast deck elements is the fact, that a supporting structure has to be provided. The cantilevering transverse steel girders of the bridge deck can clearly be seen in Fig. 2. The sole purpose of these transverse girders is to support the precast elements. Presumably a reinforced concrete deck slab without these transverse girders would contribute to a reduction of the erection costs of the deck slab. But as was mentioned before, construction time is increased in comparison to a precast solution if an in-situ concrete deck is produced. Many transverse and longitudinal joints are present in a deck slab, which is produced with full depth precast elements. Usually cracks will occur at the joints between the precast elements and the in-situ concrete, which is placed between the precast elements. Although these cracks will have only a small width of about 0,1 mm and a waterproofing layer will be applied on top of the concrete slab, some bridge owners do not permit the usage of full depth precast elements in bridge decks.

Fig. 2 Assembling full depth precast elements (© LAP Dresden) [Jung et al. 2009]

The starting point of the TU Wien proposal for the erection of deck slabs of steel-concrete-composite bridges was the search for a method which combines the construction speed, which can be achieved when using precast elements, and the quality of a monolithic concrete slab, which is obtained with in-situ construction methods.

2 TU Wien proposal for the erection of deck slabs

The working steps of the new method [Kollegger 2016, Kollegger & Fuchs 2016] to produce a bridge deck for a steel-concrete-composite bridge are shown in Fig. 3 to Fig. 7. The figures are partly taken form the patent documents and show the erection process in a simplified and schematic manner.

In a precasting plant precast slab elements are produced under industrial conditions and transported to the construction site. The precast slab elements with a thickness of 60 mm to 70 mm contain already a part of the reinforcement of the deck slab. They have a top surface with a predefined roughness and they can also be equipped with lattice girders to further enhance the bond between the element surface and in-situ concrete.

In an assembly area a working platform is installed. The top surface of the working platform needs to be adjustable, so that the surface of the working platform can be adjusted to match the geometry of the top surface of the main girders of the bridge and the position of the deck slab at the installation site.

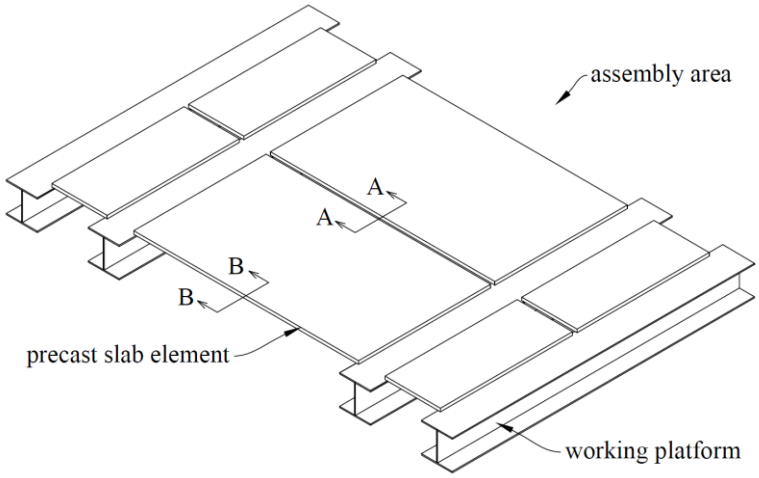

Fig. 3 Precast slab elements placed on working platform at assembly area

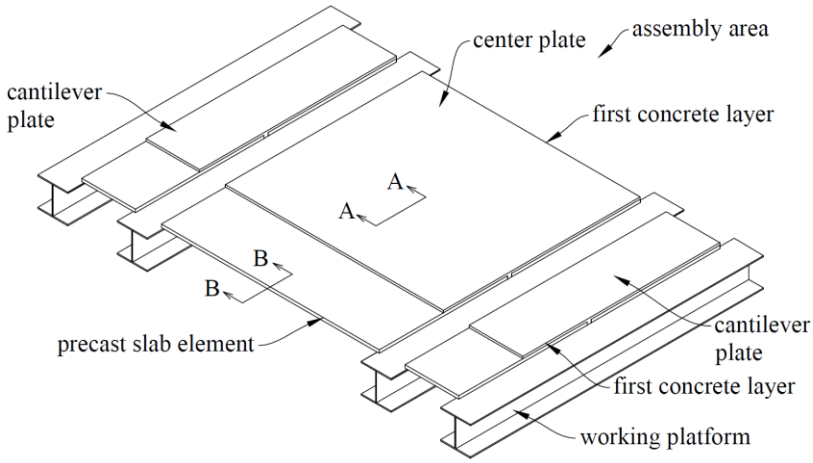

Fig. 4 Precast slab elements with first concrete layer at assembly area

Fig. 3 shows that the precast slab elements are placed on the working platform. In the further construction process a difference will be made between joints between precast elements (section A-A in Fig. 3) and joints between sections of the deck slab (section B-B in Fig. 3). Joints between sections will cause transverse construction joints in the in-situ part of the deck slab. At the assembly area reinforcement is placed on the precast elements and a first concrete layer with a thickness of 50 mm is cast (Fig. 4). The precast slab elements are connected by the reinforcement, which is not shown in the figures for the sake of keeping the drawings simple, and the first concrete layer. Three plates are formed by the process of connecting the individual precast slab elements. These plates are designated as cantilever plates and center plate in Fig. 4.

An installation carriage is needed for the transport of the plates form the assembly area to the installation site. A very basic example of an installation carriage is shown in Fig. 5. An installation carriage has many similarities with a formwork carriage [Doka 2008, Members of IABSE 2018]. Supports are fixed to the top flanges of the main girders. Roller bearing are installed on top of the supports. A movement of the installation carriage in the longitudinal direction of the bridge is

achieved by a rolling action of the longitudinal beams of the installation carriage at the roller bearings.

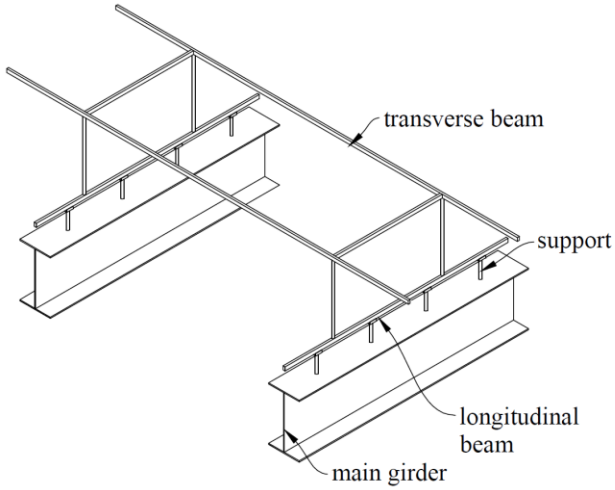

Fig. 5 Installation carriage

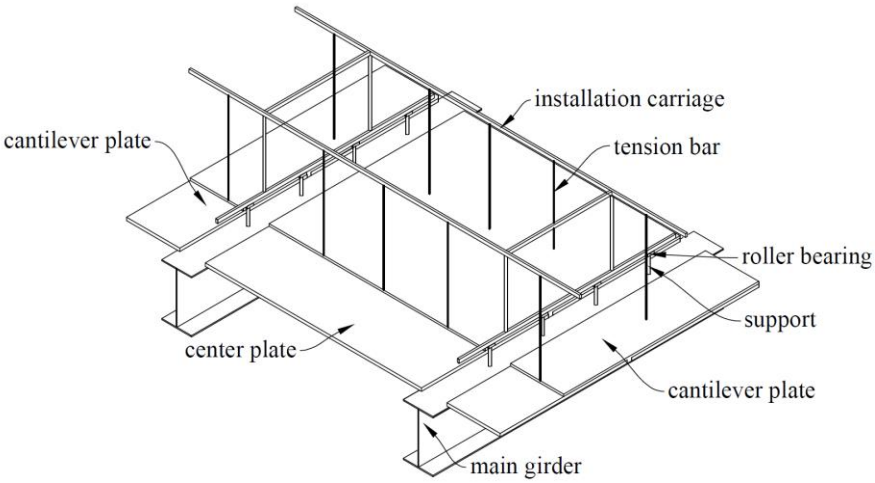

Fig. 6 Transport of prefabricated slab elements with first concrete layer using the installation carriage

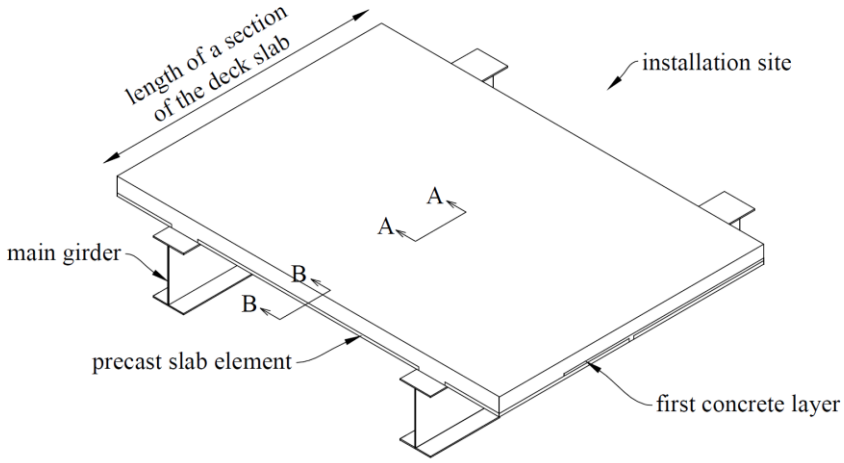

Fig. 7 Second concrete layer at installation site

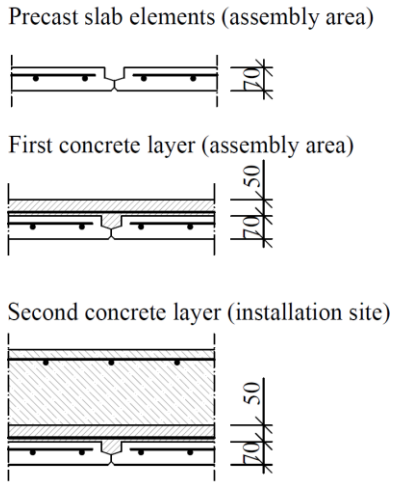

Fig. 8 Section A-A of figures 3 to 5 showing the joint between precast elements

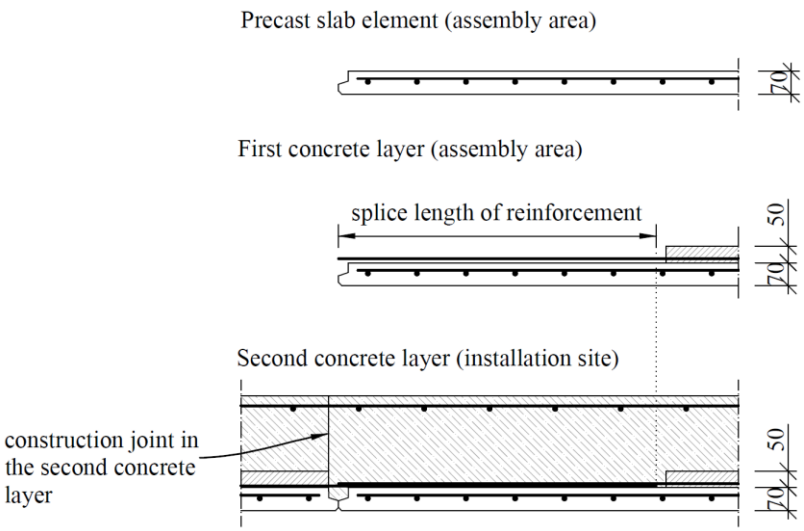

Fig. 9 Section B-B of figures 3 to 5 showing the joint between slab sections

After moving the installation carriage to the assembly area the plates are fixed to the installation carriage by tension bars. Hydraulic jacks, which are not shown in Fig. 6, are positioned on top of the transverse beams at the location of the tension bars. Lifting and lowering of the plates can be easily achieved by activating the hydraulic jacks. In the next step of the construction process the plates are moved from the assembly are to the installation site. During the longitudinal transport the plates are located in an elevated position, which is required in order to avoid a contact with the top flanges of the main girders or to pass over finished sections of the deck slab. At the installation site the plates are lowered into the final position and placed on elastomeric strips, which are fixed to the upper side of the top flanges of the main girders. Additional transverse reinforcement has to be installed in the deck over the main girders. Obviously this reinforcement cannot be present during the transport of the plates, because there would be a collision with the supports. A second concrete layer is placed at the installation site. After hardening of the second concrete layer the centre plate and the two cantilever plates become an integral part of this section of the deck slab (Fig. 7).

A section through a joint between two precast slab elements is shown in Fig. 8. The thickness of the precast slab elements is equal to 70 mm. A pocket is formed at the connecting edge, in order to obtain the required concrete cover for the reinforcement, which is placed across the joint in the first concrete layer. After hardening of the first concrete layer the precast slab elements are connected

with each other forming a plate with a thickness of 120 mm. The deck slab is completed by casting a second concrete layer at the installation site.

The situation is different for a joint between precast slab elements, which is placed at the end of the slab section, as is shown in Fig. 9. The first concrete layer cannot be cast in a strip parallel to the edge. The width of this strip corresponds approximately to the splice length of the transverse reinforcement. Continuity of the deck slab is achieved by the reinforcement and the in-situ concrete of the second layer. Because the in-situ concrete is cast at different times for two sections of the deck slab, a construction joint exists in the second concrete layer.

3 Conclusions

A new method for the production of deck slabs of steel-concrete-composite bridges is presented in this paper. The innovative feature of this new method consists in the combination of the advantages of in-situ construction using a formwork carriage and production methods with partial-depth elements.

Acknowledgements

The financial support by Österreichische Forschungsförderungsgesellschaft (FFG), Verband Österreichischer Beton- und Fertigteilwerke (VÖB), Autobahnen- und Schnellstraßen-Finanzierungs-Aktiengesellschaft (ASFINAG) and Österreichische Bundesbahnen (ÖBB) is gratefully acknowledged.

References

Doka (2008), Doka – Verbundschalwagen, Anwenderinformation 05/2008 NK

Jung, R., Reitjes, K.-H., Schreiber, O. (2009) Die Bahretalbrücke – eine Verbundbrücke mit einer Fahrbahnplatte aus Vollfertigteilen, 19. Dresdner Brückenbausymposium – Planung, Bauausführung, Instandsetzung und Ertüchtigung von Brücken, 09./10. März 2009, pp. 177 – 188

Kollegger, J. (2016), Verfahren zur Herstellung einer Fahrbahnplatte für eine Brücke, Austrian patent AT 517 231.

Kollegger, J., Fuchs, K. (2016), Method for producing a roadway plate for a bridge. WIPO World International Property Organization, WO2016/187 634 A1.

Members of IABSE working group. No 6 (2018), Bridge deck erection equipment, ice Institution of Civil Engineers.

Members of SETRA working group (2010), Steel- Concrete composite bridges. SETRA, France.