BUILDING BOX GIRDER BRIDGES USING THIN-WALLED PRE-FABRICATED ELEMENTS

Stephan Fasching[1], Sebastian Maier[1] and Johann Kollegger[1]

[1] TU Wien, Institute for structural Engineering, Vienna, 1040, Austria, betonbau@tuwien.ac.at

Corresponding author email: stephan.fasching@tuwien.ac.at

Abstract

An application of the balanced lift method using thin-walled pre-fabricated concrete elements in a bridge project in Austria is shown in the introduction of the paper. For the erection of the bridge across the river Lafnitz, U-shaped bridge girders are produced from thin-walled pre-fabricated concrete elements, erected in a vertical position and lowered to the final horizontal position using the balanced lift method.

In order to use thin-walled pre-fabricated concrete elements for the erection of box girder bridges, a new construction method was recently proposed, where segments of a box girder are produced using such elements. These segments are then connected to each other with the aid of post-tensioning tendons forming a bridge girder, which is moved to its final position by for example incremental launching or the balanced lift method. Once placed in the final position, pumped in-situ concrete is added first to the flanges and then to the webs.

It will be shown in the paper, that this approach is advantageous for bridge construction methods, which show a large difference in bending moment distribution along the bridge girder during the individual construction stages and the final state. Due to this fact, the required amounts of concrete, reinforcement and post-tensioning tendons can be reduced, smaller erection equipment is needed, and more efficient bridge structures can be produced.

Keywords: Balanced lift method, lightweight girder, post-tensioning, pre-fabrication, thin-walled elements.

1. Introduction

Thin-walled pre-fabricated elements such as double walls and semi precast slab elements are a proven and efficient technology in building construction (Bergmeister et al. 2015). The variety of advantages, in comparison to other building methods as for example in-situ casting of concrete and full precast elements, has led the Institute for Structural Engineering of TU Wien to consider their implementation for bridge construction. New technologies either for plate-girder bridges (Wimmer 2016) or bridges with a box-shaped girder (Foremniak and Kollegger 2014) have been developed. With these technologies, bridges can be erected in a very time efficient and material saving way.

The first practical application of thin-walled pre-fabricated elements in bridge construction is described in (Kollegger et al. 2014). In this paper, the design of a road bridge over the river Lafnitz, which will be erected within the next year, as well as further large-scale experiments are presented. For the construction process of this bridge the balanced lift method will be used. This method only needs the areas at the pier and at the abutments as construction site and is therefore perfectly suitable for the construction in naturally sensitive areas, as it is the case in this project. The construction process, which is suitable for U-shaped as well as for box shaped girders (Fuchs and Gaßner 2016), was tested in 2011 on a 70% scaling of the real project and can be seen in (Fig. 1). The first construction steps are similar to the known method of lowering arch halves. A pier, two compression struts and a bridge girder are erected from pre-fabricated elements in a vertical position and are connected to each other via hinges (Fig. 1 a)). Those movable joints and an auxiliary pier in the centre allow the rotation and lowering of the bridge girder (Fig. 1 b)) to its final horizontal position. Once the girder has reached its final position,

the hollow elements are filled step by step with additional pumped in-situ concrete and the internal tendons get tensioned.

a) b)

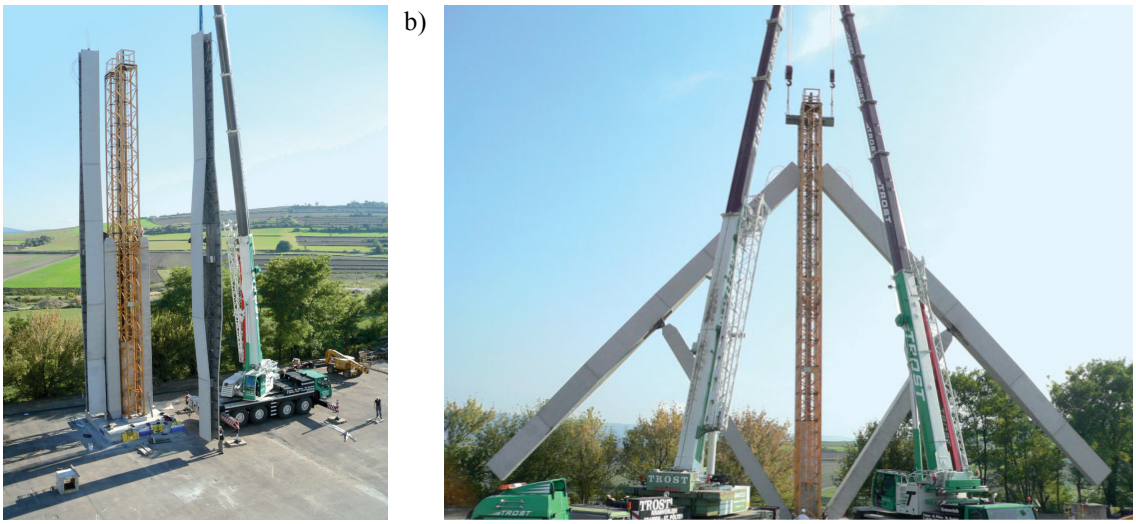

Figure 1. Large scale test of the balanced lift method using thin-walled pre-fabricated concrete elements: a) vertical assembly of compression struts, and a bridge girder in a vertical position, b) rotation and lowering process

Based on these technologies, the use of thin-walled pre-fabricated concrete elements for other construction methods and longer span bridges has been investigated at the Institute for Structural Engineering of TU Wien. The result was the development of a construction method for box girder bridges made from semi-precast slab elements and double wall elements, which can be used for any bridge erection method as for example incremental launching, balanced cantilever or span by span erection (Foremniak and Kollegger 2014). A new method for the construction of box shaped girders has recently been proposed at TU Wien and will be worked on in a new research project.

2. Previous developments of box-girder-bridges made from thin-walled pre-fabricated elements

The idea of using thin-walled elements for the erection of box shaped girders was born for two main reasons. On the one hand such elements have already been in common use on building sites for decades and are available as a standard product in many parts of the world (Bergmeister et al. 2015). The idea of using this existing infrastructure of precast factories for bridge construction was very intriguing. On the other hand, lightweight construction components with adequate spans for the lifting and rotating processes of the balanced lift method were needed.

A method for building segments of a box girder from double wall elements and ultra-thin precast elements is described in (Foremniak and Kollegger 2014) (Fig. 2). Compared to the final state, this bridge girder only weighs one fourth of the weight during construction. This fact makes this way of building segments especially advantageous for the transporting, lifting and moving processes. Either smaller cranes, or bigger segments can be used in comparison to construction with complete pre-fabricated concrete segments.

The box girder segments can be used to build bridge girders with any construction methods as for example incremental launching, balanced cantilever method or classic segmental erection methods with a launching gantry. In the following, the design of the cross-sections as well as the assembly to segments in a casting factory will be described.

2.1. Cross-sectional design

The above-mentioned segments are built using double wall elements and a bottom slab as well as a deck slab made from concrete. Those elements are all produced in a factory whilst stabilising beams are

attached to the thin slabs to strengthen the construction. For the bottom slab a concrete beam is chosen for stabilisation (Fig. 3 a)), in contrast to the deck slab which is stabilized by a U-shaped profile that is connected to the slab with the help of welded reinforcement bars (Fig. 3 b)).

Figure 2. Segment of a box girder built in a casting factory (Reichenbach and Kollegger 2016)

a) b)

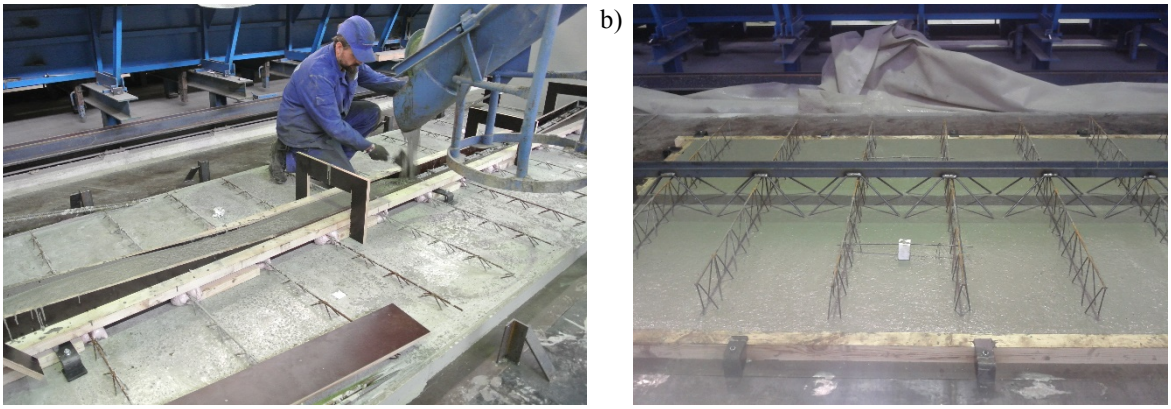

Figure 3. Casting of the concrete slabs: a) concreting of the stabilising beam on the bottom plate, b) concreting the deck slab with a composite beam on top (Foremniak and Kollegger 2014)

2.2. Assembly of segments in a precast plant

In a prefabrication factory, all parts, meaning double walls, deck plates and bottom slabs are assembled to segments. During the first step at least two double wall elements are placed next to each other on a casting bed. After that, the reinforcement of the bottom slab is placed (Fig. 4 a)), and the bottom slab is concreted in order to connect the two double walls and create a U-shaped cross-section. To finalize the box shaped segment, the completely pre-fabricated deck slab (strengthened by a steel beam (Fig. 3 b)), is placed on top of the double wall elements and connected with a welding connection (Fig. 4 b)). After that, the finished segments can be handled by crane and transported to the construction site.

Tests on such segments have shown, that these segments are strong enough for transport and to carry the additional layers of in-situ concrete. Solely the deck slab has to be supported when pumped concrete is added (Foremniak and Kollegger 2014).

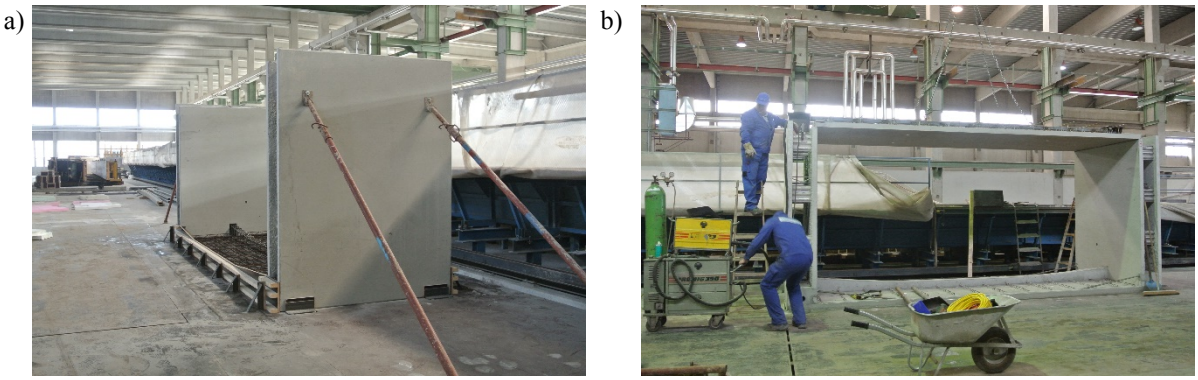

Figure 4. Assembly of segments in a factory: a) concreting of the bottom plate, b) welding connection between deck slab and double wall (Foremniak and Kollegger 2014)

3. New Approach for the construction of box-girder-bridges

A new approach for building segments of a box shaped girder has recently been proposed at the Institute for Structural Engineering of TU Wien (Fasching and Kollegger 2018; Kollegger and Fasching 2017). This new method creates a similar cross-section as the one developed by Kollegger and Reichenbach but is strengthened by closed cross frames in the segments. Big differences to the previously described method are the use of plates instead of double wall elements, the use of screw connections and the fact that the assembly of segments can be done on site and not in a factory, which is additionally advantageous for transporting the elements.

3.1. Cross-sectional design

One major difference to the old method is that the pre-fabricated parts are equipped with steel cross beams every approximately two meters. These crossbeams have cut-outs where ducts can be put through for later post tensioning. They are also used to connect the separate plates to one segment, as shown in the details in (Fig. 6). Such plates with crossbeams are already in use in building construction (Olipitz 2017). After fixing all screw connections, the cross beams of the individual plates act together as one cross frame. This frame gives the segments enough stability in the transversal direction to bear the loads caused by the transport and lifting processes as well as by the pouring of the in-situ concrete, which is needed to create a monolithic cross section in the final state (Fig. 5).

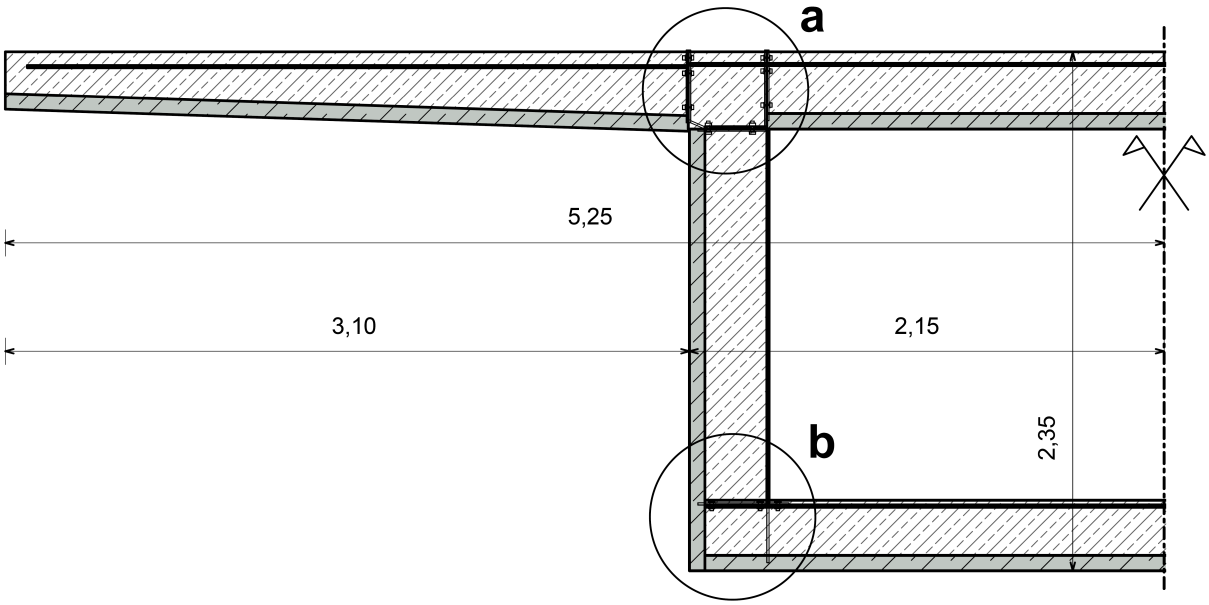

Figure 5. Cross section of a box girder made from thin-walled pre-fabricated elements in the final state (thin-walled pre-fabricated elements: grey; in-situ concrete: hatched)

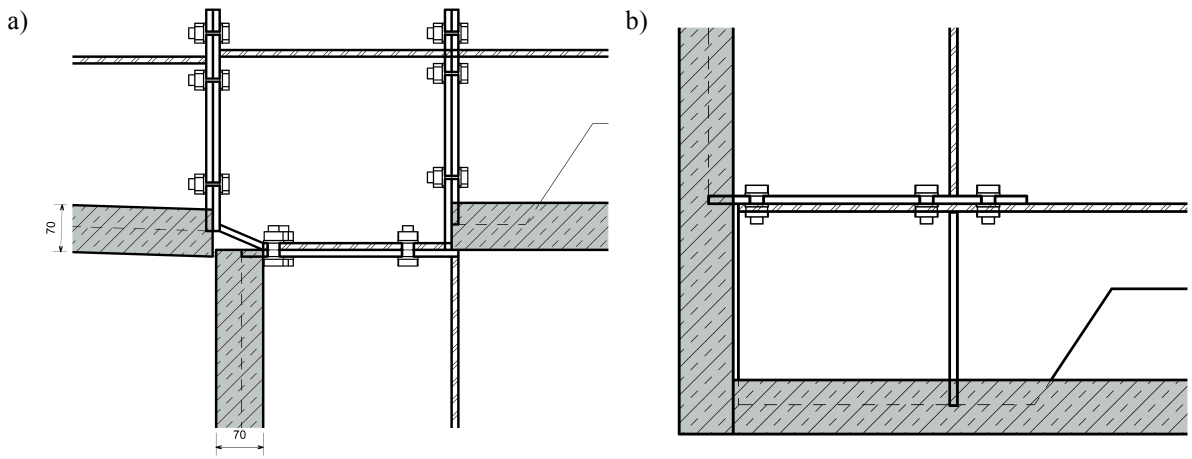

Figure 6. Possible connection details referring to (Fig. 5): a) connection between web-plate, deck slab and cantilever slab, b) connection between bottom slab and web plate

3.2. Assembly of segments on the construction site

After the thin-walled plates with steel-crossbeams are produced in a precast plant, the plates can be transported to the building site. Following that, four elements are connected to each other to form a segment of a box girder. Additionally, the cantilever parts can also be added, as shown in (Fig. 7). For the execution of a real bridge project it will be advantageous to add those cantilever plates after the girder has reached its final position. This can be advantageous due to the fact that those parts are statically not necessary to move the girder to its final position nor during the filling with in-situ concrete and only cause additional stresses because of their self-weight.

3.3. Examples for the use of the new design for different construction methods

When a certain number of segments have been built in the assembly area, the segments are tensioned together to form a part of a bridge girder. Depending on the construction method that will be used for the erection of the bridge girder, the elements can either be tensioned to an existing structure separately, or more elements can be tensioned to a part of a girder, that is then moved to its final position. Different options are described in the next paragraphs.

To transfer the loads from the post tensioning tendons to the thin-walled concrete elements, anchor blocks have to be designed. This specific problem will be part of a research project that is being carried out at the Institute for Structural Engineering at TU Wien in the next three years.

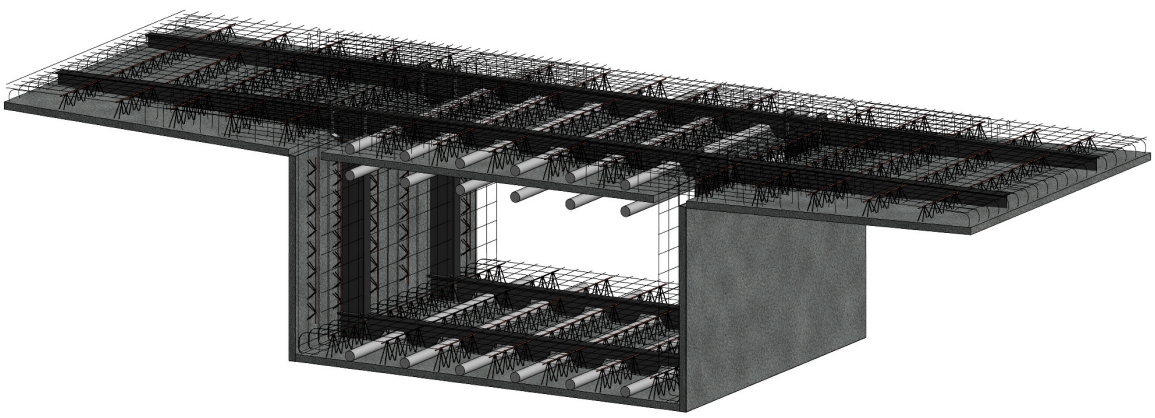

Figure 7. Segment of a box girder, made from thin-walled pre-fabricated elements, frame made from steel crossbeams, including all ducts and reinforcement for the final state

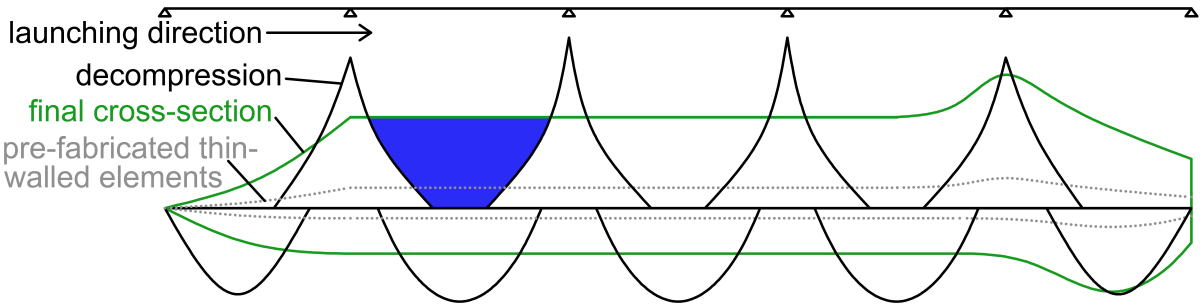

Figure 8. Comparison of the bending moment envelope of an incrementally launched bridge with final cross-section (green) and with thin-walled pre-fabricated elements (dotted) to the bending moment envelope for decompression in the final state (black). Comparison of bending moment difference between construction and final state with the final cross section (blue area) and with thin-walled pre-fabricated elements (grey area) (Fasching and Kollegger 2018)

3.3.1. Incremental launching method

The utilisation of lightweight girders is especially advantageous when using the incremental launching method, due to the big differences in the bending moment distribution between construction stages and the final state. This phenomenon is shown in (Fig. 8) where three bending moment envelopes of an incrementally launched bridge are compared to each other. A bridge girder that has been moved with its final cross section (green line) is compared to the bending moment envelope of the same bridge, launched with pre-fabricated thin-walled elements (dotted line) and the bending moment envelope for decompression in the final state (black line). In this example the weight of the bridge girder made from thin-walled pre-fabricated elements is less than 20% of the girder in the final state. The blue area shows the bending moment that must be picked up by expensive tendons, that are required just for construction phases. The grey area shows the same effect for a girder launched with thin walled pre-fabricated elements. The grey area is only 13% of the blue area, which means a big reduction of tendons can be achieved by using thin-walled precast concrete elements.

(Fig. 9) shows the construction steps of incremental launching with segments made from thin-walled pre-fabricated elements. This method can be used in its usual way when lightweight segments are utilised instead of cast in place concrete. The only difference is, that instead of a casting bed there is an assembly area at one end of the bridge. Here, the thin-walled elements are assembled to segments as described above. After that, a certain number of segments are attached to the end of the bridge girder with the aid of post tensioning tendons. Then the girder is launched with usual bridge deck erection equipment. The light weight of the girder reduces not only the amount of tendons, but also allows a more efficient design of the equipment for launching the bridge, such as hydraulic jacks, saddles, winches and temporary bearings in comparison to launching the girder with its final cross section.

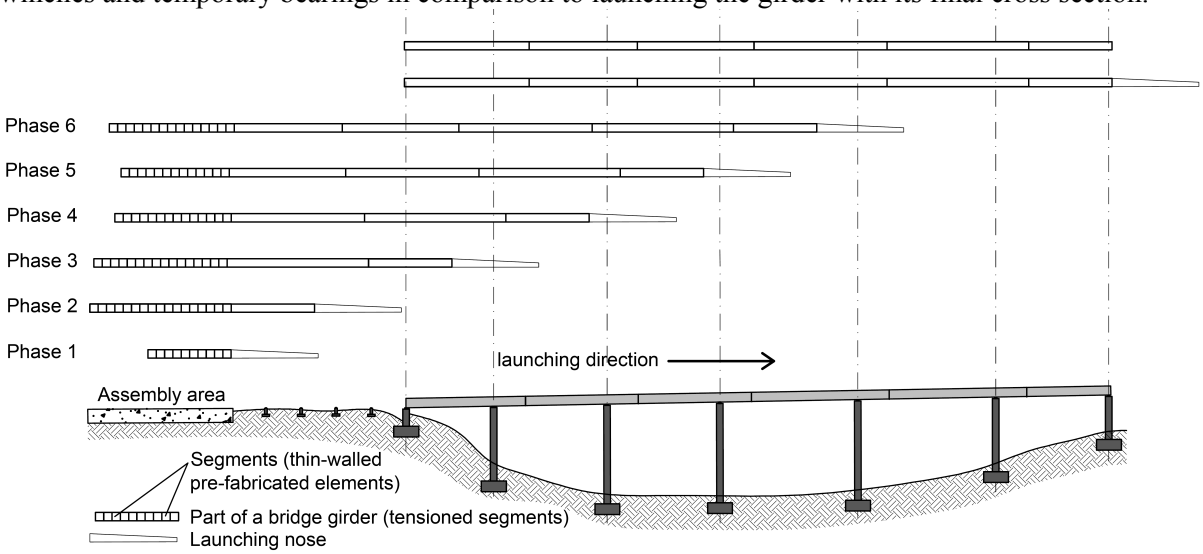

Figure 9. Incremental launching using thin-walled pre-fabricated elements

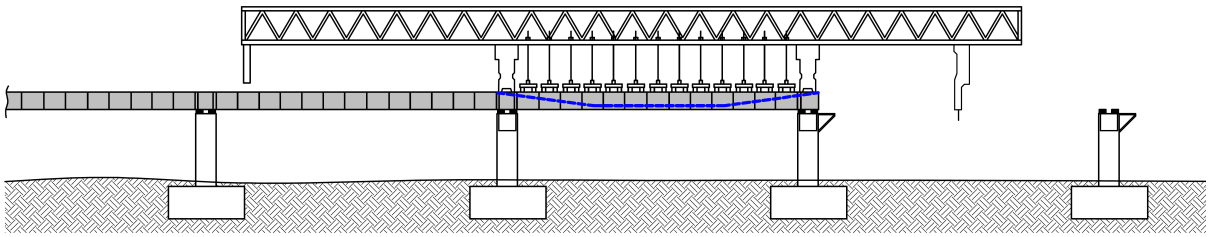

Figure 10. Span by span erection with an overhead launching gantry

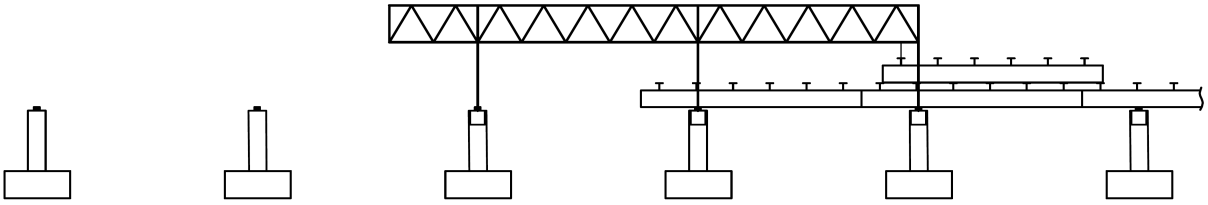

Figure 11. Span by span erection with thin-walled pre-fabricated elements and an overhead launching gantry (Kollegger et al. 2018)

3.3.2. Span by span erection with launching gantry

In (Fig. 10) an example for span by span installation of pre-fabricated elements is shown. The figure clearly shows that before the post tensioning tendons are tensioned, the whole weight of all segments of the bridge girder has to be carried by the overhead gantry. The deadweight of the pre-fabricated segments is the decisive load case for the design and the cost of the launching gantry. This fact proves that the use of thin-walled pre-fabricated elements with a weight of less than 20% of the bridge girder in the final state are a very efficient and economical alternative to full precast segments.

The construction process using thin-walled pre-fabricated elements is presented in (Fig. 11). The thin-walled pre-fabricated elements have already been connected to a part of a bridge girder in the assembly area, using post tensioning tendons. Following that, this part is transported to the installation site and lifted into position using an overhead gantry (Kollegger et al. 2018).

3.3.3. Balanced cantilever method

The balanced cantilever method is often used in combination with in-situ form-travellers, as well as by installing pre-fabricated elements with lifting frames or gantries. An example for the balanced cantilever method with a launching gantry is shown in (Fig. 12 a)). The bending moment due to the big lengths of the cantilevers before connecting the parts to a continuous girder is usually decisive for the design of the superstructure, especially at the supports. Because of that it is again advantageous to use segments made from thin-walled pre-fabricated elements with a very low dead load during construction, as the applied bending moment is reduced according to the reduction of self weight (Fig. 12 b)). Those elements can be placed to form a continuous beam before the concrete for the final state is added. Due to this fact, the amount of tendons can be reduced and, as with the previously described methods, the erection equipment can be designed lighter.

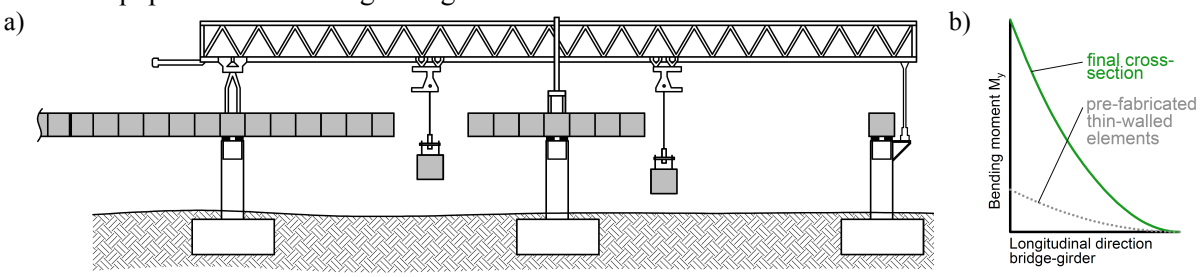

Figure 12. balanced cantilever method with launching gantry: a) lifting of pre-fabricated segments to the installation site, b) comparison of the bending moments of the girder during construction (green line: girder with final cross section; dotted line: girder made from thin-walled pre-fabricated elements)

3.4. Completion of the girder by in-situ concrete

Once the bridge girder has reached its final position, regardless of the bridge construction method used, it can be completed by adding pumped in-situ concrete. The pumped concrete can be poured directly onto the deck- and onto the bottom slab, for the webs, either shotcrete, usual formwork, or a lost formwork made from concrete plates can be used. The question of the most efficient method to be used will be examined in the following research.

By placing concrete first in the areas with the highest stresses it is possible to strengthen the bridge girder in a targeted manner. The order of concreting and tensioning additional internal or external tendons is therefore very important to be able to strengthen the structure in the right places, before the additional load from the next step of pouring concrete is added.

4. Conclusions

Building with thin walled elements has become standard for a lot of structures in building construction, as for example double walls or semi pre-fabricated slab elements. For a new bridge construction method, the balanced lift method, the development of lightweight girders, to enable all lifting and rotation processes, was necessary. By thinking outside of the box the idea of using standard thin-walled pre-fabricated elements from building construction also in bridge construction came to mind, resulting in two different design approaches which have been developed at TU Wien. One approach is suitable for plate girder bridges, where the first project will be executed within the next year, and the second approach is meant for the construction of box girder bridges.

Based on these developments, a new design approach for box girder bridges has recently been proposed at the institute for structural engineering of TU Wien. In this new method, segments of a box shaped girder can be produced from thin-walled pre-fabricated elements directly on site. These elements are strengthened by steel crossbeams, and with those crossbeams it is possible to connect the plates with standard screw connections. When four plates are assembled to one segment, the crossbeams act together as one cross frame, giving the segments enough stability for further operations.

By presenting three different examples, it was possible to show, that these segments can be used for many bridge construction methods in an advantageous way. The reduced deadload during construction as well as the high level of prefabrication and automation, enables the use of smaller erection equipment and shortens construction time in addition to saving material and monetary resources, compared to classic bridge building methods.

References

Bergmeister, K., Fingerloos, F., and Wörner, J.-D. (2015). *Betonkalender 2016*. Ernst & Sohn GmbH & Co. KG, Wien, Berlin, Darmstadt.

Fasching, S., and Kollegger, J. (2018). "Building bridges using thin-walled concrete elements and post-tensioning." *Better, Smarter, Stronger, Proceedings of the 2018 fib congress held in Melbourne*, Melbourne.

Foremniak, S., and Kollegger, J. (2014). "Bridge girders out of hollow wall elements and ultra-thin precast elements." *The 10th fib International PhD Symposium in Civil Engineering,* Québec, Canada, 297–301.

Fuchs, K., and Gaßner, G. (2016). Comparison between balanced lift method and balanced cantilever method for the San Leonardo viaduct. Diploma thesis, TU Wien, Austria.

Kollegger, J., and Fasching, S. (2017). "Verfahren zur Herstellung eines Brückenträgers einer Spannbetonbrücke." Wien.

Kollegger, J., Fasching, S., Maier, S., and Huber, T. (2018). "Verfahren zur Herstellung eines Brückenträgers einer Spannbetonbrücke." Austrian Patent application, Wien.

Kollegger, J., Foremniak, S., Suza, D., Wimmer, D., and Gmainer, S. (2014). "Building bridges using the balanced lift method." *Structural Concrete*, 15(3), 281–291.

Olipitz, M. (2017). "Die CLC-Multifunktionsdecke." *Stahlbau*, 86(5), 399–407.

Reichenbach, S., and Kollegger, J. (2016). "Erecting bridges using lightweight precast thin-walled concrete girders." *03.2016*, CPI-Worldwide.com., (3 2016), 126–130.

Wimmer, D. (2016). "Entwicklung eines neuen Brückenbauverfahrens durch die Kombination von dünnwandigen Betonfertigteilen und Vorspannung." Ph.D. thesis, TU Wien, Austria.