Extending to 1-plane drawings

Thekla Hamm*[1], Fabian Klute†[1], and Irene Parada‡[2]

[1]TU Wien, Austria
[2]Graz University of Technology, Austria

Abstract

We study the problem of extending a connected (1-)plane drawing of a graph G with a maximum set of edges M' chosen from a given set of edges M of the complement graph of G. It turns out the problem is NP-hard already for the case of the initial drawing being plane and orthogonal. On the positive side we give an FPT-algorithm in k for the case of adding k edges and M being the set of all edges in the complement of G.

1 Introduction

Suppose you are presented with the challenge of adding connections to a previously drawn graph, but without changing the existing layout. On top, you are supposed to keep certain properties of the drawing intact, e.g., keep it simple, rectilinear, or k-planar. In the end it might be impossible to add all new connections without violating these properties. Hence you now would be interested in finding a maximum set of those connections, but is this easy to do?

We formulate this intuitive problem as follows: Given a drawing $D(G)$ of a graph $G = (V, E)$ that has a set of properties, and a set of *candidate edges* M of the complement graph $\overline{G}$ of G, find a maximum subset $M' \subseteq M$ that can be *added* to $D(G)$. That is, such that the result is a drawing $D(G^+)$ of the graph $G^+ = (V, E \cup M')$ with a desired set of properties and containing $D(G)$ as a subdrawing. Following Angelini et al. [1] and Arroyo et al. [2], we say that $D(G)$ can be *extended* by the set of edges M'. Note that in the literature the term *augmenting* has also been used for adding edges (and/or vertices) to a graph (e.g. [6]).

Arroyo et al. [2] studied this problem in the context of so called *simple drawings* and proved it to be NP-hard in this setting. A simple drawing $D(G)$ is a drawing of a graph G in which two edges share at most one point, either a proper crossing (tangencies are not allowed) or a common endpoint. In contrast, Angelini et al. [1] showed that when given a planar graph G and a plane drawing $D(G')$ of a subgraph G' of G, one can test in linear time if it can be extended to a plane drawing of G.

Here we focus on the problem of finding a maximum subset of edges that can be added to a given drawing such that it remains 1-planar. The class of 1-planar graphs is widely studied in graph theory and graph drawing in the context of so called "beyond planarity graphs" [5]. For general results on 1-planar graphs see the annotated bibliography by Kobourov et al. [10]. We call a graph G 1-planar if there exists a simple drawing $D(G)$ in which no edge is crossed more than once. Recognizing if a given graph is 1-planar is NP-hard [8] and stays hard even if the graph consists of a planar graph plus one edge [4]. Note that from these results it follows that deciding if we can add all the edges such that the result is a 1-plane drawing is NP-hard, since the vertices in a simple drawing can be arbitrarily placed. However, the problem we study here includes the natural assumption that the initial drawing is connected. The proofs showing that recognition of 1-planarity is hard [8, 4, 11] cannot be directly applied to this setting, since they all rely on the fact that certain vertices can be freely placed.

Formalizing our previous question, we are interested in the following: given a connected (1-)plane drawing $D(G)$ of a (1-)planar graph $G = (V, E)$ and a subset M of edges of $\overline{G}$, what is the maximum cardinality of a set $M' \subseteq M$ such that the edges in M' can be inserted into $D(G)$ to obtain a 1-plane drawing.

We show this problem to be NP-hard in general, even if $D(G)$ is plane, connected, and orthogonal. Our reduction, as the one by Arroyo et al. [2], is from maximum independent set. However, the used gadgets are substantially different. In the case of extensions to simple drawings, the gadgets profile the ways in which an edge can be added, and rely on edges that can cross multiple other edges. In our case, the gadgets are plane, straight-line drawings, and instead rely on pairs of edges that cannot be added simultaneously. We also give an FPT-time algorithm in the size of the set M', when M is the set of all edges in $\overline{G}$. Our algorithm works even if the initial drawing is not connected and 1-plane.

*Email: thamm@ac.tuwien.ac.at. Supported by the Austrian Science Fund (FWF): Project P31336.

†Email: fklute@ac.tuwien.ac.at.

‡Email: iparada@ist.tugraz.at. Supported by the Austrian Science Fund (FWF): W1230.

2 NP-hardness

In this section we prove that extending a connected (1-)plane drawing by a maximum set of given candidate edges is NP-hard, even if the initial drawing is plane and orthogonal.

Theorem 1 *Given a connected plane drawing $D(G)$ of a graph G, an integer k, and a subset M of the edges of the complement graph of G, it is NP-complete to decide if there is a subset $M' \subseteq M$ of cardinality k extending $D(G)$ to a 1-plane drawing.*

Note that the problem is in NP, since it can be encoded combinatorially. To prove Theorem 1 we reduce from maximum independent set (MIS). A set of vertices of a graph is an *independent set* if no pair of vertices in the set are adjacent. The problem of determining the maximum independent set of a given graph is NP-hard in general, even when the given graph is planar and has degree at most three [7, Lemma 1].

Planar graphs with degree at most three admit a 2-page book embedding [9, 3]. A *2-page book embedding* is a plane drawing in which all vertices are placed on a horizontal line, the *spine* of the book, and the edges lie completely either in the upper or lower half-plane. Thus, we can construct a 2-page book embedding $D(G)$ from an MIS instance consisting of a graph G with degree at most three. By replacing the vertices of $D(G)$ with vertex-gadgets we construct a plane drawing $D'(G')$ of a graph $G' = (V', E')$. Then the edges in each half-plane of $D(G)$ define a set of edges M of the completement graph of G' such that finding a maximum subset of edges $M' \subseteq M$ extending $D'(G')$ to a 1-plane drawing is equivalent to finding a maximum independent set of G.

Vertex-gadget Our main gadget for the reduction is the vertex-gadget. It consists of symmetric top- and bottom-halves, separated by the spine. See Figure 1 left for an illustration. The vertices s^i are endpoints of candidate edges corresponding to the original graph edges. The colored pairs represent auxiliary candidate edges, and the candidate edge uu' encodes whether the vertex was picked in the independent set. For a detailed description see the full version of the paper.

Concatenating vertex-gadgets Let $D(G)$ be a 2-page book embedding of a graph $G = (V, E)$ with max-degree three. For each vertex $u \in V$ we create a vertex-gadget at the position of u as above. We add the vertex label of the corresponding vertex in V as a subscript to the named vertices in the gadget. From left to right we connect the gadgets as follows. For two consecutive gadgets on the spine, we identify the rightmost vertex on the spine of the first vertex-gadget with the leftmost vertex on the spine of the second vertex-gadget. In that way, we join all vertex-gadgets into one plane drawing. Finally, we add an orthogonal path connecting the leftmost vertex on the spine with the rightmost one such that it surrounds the top-half of the drawing. We refer to this path as the *surrounding path*. See Figure 1 right.

Candidate edges For each vertex in the 2-page-book drawing $D(G)$, we sort the incident (at most three) edges in the top half-plane in clockwise order. Consider an edge xy drawn in the top half-plane of $D(G)$. Without loss of generality, let this edge be the i-th one incident to x and the j-th one incident to y, we then add the *candidate* edge $s_x^i s_y^j$ to M. For an edge in the bottom half-plane of $D(G)$ we proceed analogously. After adding all candidate edges for the top and bottom half-planes, we add for all $v \in V$ the edges $a_v b_v$, $a'_v b'_v$, $c_v d_v$, $c'_v d'_v$, and $u_v u'_v$ to M.

Lemma 2 *The construction is a polynomial-time reduction from maximum independent set in planar graphs with degree at most three.*

Proof. We begin by showing in the three following claims which of the candidate edges can be added simultaneously to the vertex-gadgets. The proofs, that can be found in the full version of this paper, rely on the following strategy. To show that an edge cannot be added, we identify two simple closed curves whose intersection consists at most of vertices and intersection points of the drawing. These curves strictly separate the endvertices of the edge we want to add.

Claim 1 *Edges ab and cd (analogously $a'b'$ and $c'd'$) cannot be added simultaneously.*

Claim 2 *If the edge uu' is added to a horizontal concatenation of vertex-gadgets (including the surrounding path), neither cd nor $c'd'$ can be added.*

Claim 3 *Consider a horizontal concatenation of vertex-gadgets including one with x as subscript and one with y as subscript. Then, the edge $s_x^i s_y^j$ cannot be added if both $a_x b_x$ and $a_y b_y$ are added.*

With these three claims at hand, we proceed to tackle Lemma 2. Let $G = (V, E)$ be a planar graph with degree at most three and $k \in \mathbb{N}$. We reduce from the problem of deciding if G has an independent set of size k. First, we construct a plane drawing $D'(G')$ from G and a set M of candidate edges as explained above. Note that this set consists of $5|V| + |E|$ edges: $a_v b_v$, $a'_v b'_v$, $c_v d_v$, $c'_v d'_v$, and $u_v u'_v$ for each $v \in V$ and one $s_x^i s_y^j$ or $s_x'^i s_y'^j$ with $i, j \in \{1, 2, 3\}$ per edge $xy \in E$. Moreover, it is a polynomial construction.

The problem we want to reduce to is deciding if $D'(G')$ can be extended to a 1-plane drawing by adding a set of edges $M' \subseteq M$ with cardinality $|M'| = |E| + 2|V| + k$.

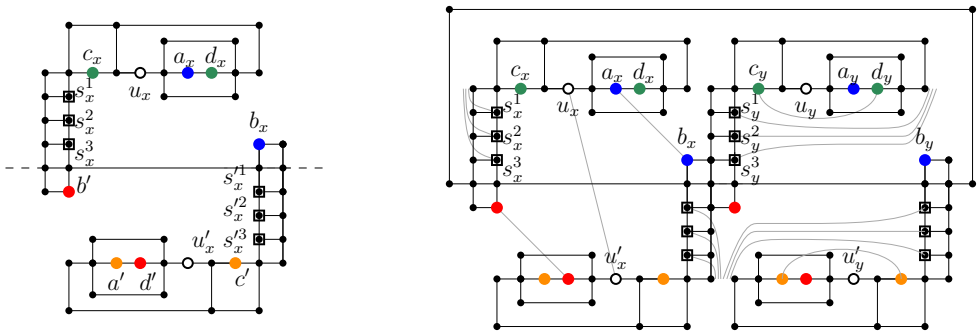

Figure 1: Reduction. Left: vertex-gadget. Right: concatenation of two vertex-gadgets and possible extensions.

First, we show that if G has an independent set I of size k we find a subset $M' \subseteq M$ of the candidate edges of size $|E| + 2|V| + k$. Consider Figure 1 right. For a vertex $x \in I$ add the edges $a_x b_x$, $a'_x b'_x$, and $u_x u'_x$ as shown in the left half of the figure. For any vertex $y \in V \setminus I$ add the edges $c_y d_y$ and $c'_y d'_y$ as shown in the right half. Finally, add all candidate edges of the form $s_x^i s_y^j$ and $s_x'^i s_y'^j$ with $i, j \in \{1, 2, 3\}$ and $xy \in E$ to M'. The way we draw a candidate edge $s_x^i s_y^j$ depends on whether x or y are part of the independent set I. In general we draw these segments with three arcs: the first and last ones locally around the endpoints, respectively, and the middle one as a (deformed) arc of the 2-page-book drawing $D(G)$. See Figure 1 right. Since I is an independent set, each edge has at most one endpoint in I. Thus, each edge $s_x^i s_y^j$ and $s_x'^i s_y'^j$ with $i, j \in \{1, 2, 3\}$ and $xy \in E$ that we added to the drawing has at most one crossing. Therefore, we obtained a 1-plane extension by $|E| + 2|V| + k$ edges.

Conversely, let $M' \subset M$ be a set of $|E| + 2|V| + k$ candidate edges that can be added to $D'(G')$ and that contains the minimum possible amount of uu' edges. We then find an independent set of size k of G in the following way: by Claim 1, at most $2|V|$ candidate edges of the form ab and cd can simultaneously be added. Thus, at least k of the added candidate edges are uu' edges. Therefore, if the set of vertices $\{v : u_v u'_v \in M'\}$ is an independent set of G we are done. Assume on the contrary that $\{v : u_v u'_v \in M'\}$ is not an independent set. Then there exists an edge $xy \in E$ such that $u_x u'_x$ as well as $u_y u'_y$ were added. By Claim 3 $a_x b_x$ or $a_y b_y$ cannot be added. Moreover, by Claim 2, neither $c_x d_x$ nor $c_y d_y$ were added. If $a_x b_x$ is not in M', we could remove $u_x u'_x$ from M' and add $c_x d_x$. That edge can always be added by drawing it below (and as close as needed to) the horizontal path from c_x to d_x, since neither u_x nor a_x have an incident edge in M' after $u_x u'_x$ was removed, and all other edges cannot enter a simple closed curve that they would have to leave. Symmetrically, if $a_y b_y$ is not in M' we could remove $u_y u'_y$ from M' and add $c_y d_y$ to M'. This contradicts the fact that M' has the minimum amount of uu' edges. □

3 FPT for adding arbitrary edges

In this section we show that for a 1-plane drawing $D(G)$ of a graph G one can decide in FPT-time in k if there exists a set of k edges in $\overline{G}$ that extend $D(G)$ to a 1-plane drawing.

We prove Theorem 8 using a series of technical lemmas and observations. The goal is to obtain conditions checkable in polynomial time that can lead to a positive answer, and that, if not met, imply a bound that is polynomial in k on for the size of the structures where edges can be non-trivially added.

For a 1-plane drawing $D(G)$ of a graph G we construct a plane drawing by placing a vertex on every intersection point of two edges in $D(G)$ and consider the faces of this planarized drawing as the *cells* of the 1-plane drawing $D(G)$. Note that every cell has some vertex of $D(G)$ on its boundary.

Observation 3 *Let $D(G)$ be a 1-plane drawing of a graph G. Assume there is an edge e of $\overline{G}$ which can be drawn in one cell (two adjacent cells) of $D(G)$ in a 1-plane way such that no other edge of $\overline{G}$ can be added to $D(G)$ intersecting the interior of that cell (either of the two cells). Then, if $D(G)$ can be extended with k edges, there is an extension with k edges in which e is drawn into the cell (the two cells).*

The first lemma considers a case in which we can add k edges to a single cell of $D(G)$.

Lemma 4 *Let $D(G)$ be a 1-plane drawing of a graph G. If $D(G)$ contains a cell with at least $6k+1$ vertices on its boundary, then we can extend $D(G)$ by k edges to a 1-plane drawing.*

Now we consider cases in which we can extend drawings within many, possibly small cells.

Observation 5 *Let $D(G)$ be a 1-plane drawing of a graph G. If $D(G)$ contains at least k cells, each with the endpoints of a distinct edge of $\overline{G}$ on its boundary, we can extend $D(G)$ by these k edges.*

However, it might be necessary to introduce new crossings when extending $D(G)$. For this reason, we consider pairs of adjacent cells whose shared boundary can be crossed by an added edge. If one can find sufficiently many disjoint such pairs, one can avoid introducing crossings between new edges. The main challenge is to enforce disjointness of the pairs and distinctness of the added edges at the same time .

Formally, we are interested in pairs of cells such that their shared boundary can be crossed in a 1-plane extension of $D(G)$. We call these pairs *crossable pairs*. For these pairs we consider edges of $\overline{G}$ whose addition to $D(G)$ in the crossable pair requires crossing the shared boundary, which we call its *edge options*. Observe that (i) in a crossable pair, both boundaries of the cells share at least two vertices in V, as their boundaries share at least an edge; and (ii) edge options have a vertex on the boundary of each cell that is not on the common boundary.

Note that in the restricted case that $D(G)$ is plane such a construction is easy: If $D(G)$ has at least $6k$ faces, triangulating $D(G)$ leaves us with at least k disjoint crossable pairs, and $D(G)$ can be extended by k egdes to a 1-plane drawing.

Lemma 6 *Let $D(G)$ be a 1-plane drawing of a graph G. If $D(G)$ contains at least k interior-disjoint crossable pairs, each pair having at least two edge options, then we can add k edges to $D(G)$.*

Under the condition that no edge as in Observation 3 exists in $D(G)$, the next lemma bounds the number crossable pairs in which we can find a particular edge option. This lemma can then be used to bound the number of crossable pairs with one edge option when Observation 3 does not apply.

Lemma 7 *Let $D(G)$ be a 1-plane drawing of a graph G and $\overline{G} = (\overline{V}, \overline{E})$ its complement. If $e \in \overline{E}$ is an edge option for at least $60k^2$ crossable pairs, and for each of these crossable pairs at least one of their cells allows the addition of an edge in $\overline{E} \setminus \{e\}$ in a plane manner, or at least one of their cells is in a crossable pair with another edge option, then we can add k edges to $D(G)$.*

Our final theorem ties the above observations and lemmas together. We refer to the full version of this paper for a proof of Theorem 8 and, in particular, the details on how to check in polynomial time the conditions of the observations and lemmas.

Theorem 8 *Given a 1-plane drawing $D(G)$ of a graph G it is* FPT *in k to find a subset of k edges of the complement graph that extend $D(G)$ to a 1-plane drawing.*

4 Conclusions

We showed that the problem of finding a maximum subset of candidate edges for extending connected 1-plane drawings is NP-hard, even if the initial drawing is plane and orthogonal. With the condition of the initial drawing being connected, it would also be interesting to look at the problem of adding a given set of candidate edges. Furthermore, we gave an FPT-algorithm in the number of edges to add, for the case in which the set of candidate edges M consists of all edges in $\overline{G}$. For this special case it remains open if it is NP-hard or polynomial time solvable. In terms of the general problem, in which the set of candidate edges M is part of the input, we suspect that an FPT-algorithm in the number of edges to add exists.

References

[1] P. Angelini, G. Di Battista, F. Frati, V. Jelínek, J. Kratochvíl, M. Patrignani, and I. Rutter. Testing planarity of partially embedded graphs. *ACM Transactions on Algorithms*, 11(4):32:1–32:42, 2015.

[2] A. Arroyo, M. Derka, and I. Parada. Extending simple drawings. In *Proceedings of the 34th European Workshop on Computational Geometry (EuroCG'19)*, pages 60:1–60:7, 2019.

[3] M. A. Bekos, M. Gronemann, and C. N. Raftopoulou. Two-page book embeddings of 4-planar graphs. *Algorithmica*, 75(1):158–185, 2016.

[4] S. Cabello and B. Mohar. Adding one edge to planar graphs makes crossing number and 1-planarity hard. *SIAM Journal on Computing*, 42(5):1803–1829, 2013.

[5] W. Didimo, G. Liotta, and F. Montecchiani. A survey on graph drawing beyond planarity. *ACM Computing Surveys*, 52(1):4:1–4:37, 2019.

[6] K. P. Eswaran and R. E. Tarjan. Augmentation problems. *SIAM Journal on Computing*, 5(4):653–665, 1976.

[7] M. R. Garey and D. S. Johnson. The rectilinear Steiner tree problem is NP-complete. *SIAM Journal on Applied Mathematics*, 32(4):826–834, 1977.

[8] A. Grigoriev and H. L. Bodlaender. Algorithms for graphs embeddable with few crossings per edge. *Algorithmica*, 49(1):1–11, 2007.

[9] L. S. Heath. *Algorithms for embedding graphs in books*. PhD thesis, University of North Carolina, 1985.

[10] S. G. Kobourov, G. Liotta, and F. Montecchiani. An annotated bibliography on 1-planarity. *Computer Science Review*, 25:49–67, 2017.

[11] V. P. Korzhik and B. Mohar. Minimal obstructions for 1-immersions and hardness of 1-planarity testing. *Journal of Graph Theory*, 72(1):30–71, 2013.