**China-Austria Forum for Postgraduates of Civil Engineering**
October 7-8, 2019 | Vienna, Austria

# ON THE DYNAMIC ANALYSIS OF LAYERED STRUCTURES: EQUIVALENCES AND NONLINEAR EFFECTS

**Rudolf Heuer**[1]

**ABSTRACT:** Flexural vibrations of layered structures composed of elastic layers are studied. Alternative formulations of various higher-order theories of beams, plates and shallow shells are introduced that offer complete analogies between the corresponding initial-boundary value problems and those of homogenized single layer structures of effective parameters. The structures treated are composed of moderately thick layers and even the effects of geometrically nonlinear large deflection, thermal influence, and elastic interlayer slip are considered within appropriate formulations and equivalences.

**KEYWORDS:** Instructions to authors, book of abstracts, Austria, China

## 1 INTRODUCTION

Although the earlier theories for laminates were based on the Kirchhoff-Love hypothesis, it was soon recognized that, due to the relatively small transverse stiffness of composites, thickness-shear deformations should be included to obtain realistic predictions of flexural behavior. Furthermore, for a composite structure whose material and geometric characteristics approach those of a sandwich element, a uniform transverse-shear strain assumption made in most laminate theories becomes unrealistic as it can be ascertained by comparison with a three-dimensional elasticity analysis. Transverse discontinuous mechanical properties cause displacement fields in the thickness direction, which can exhibit a rapid change in slopes corresponding to each layer interface (zig-zag effect). The transverse stresses must fulfill inter-laminar continuity at each layer interface. If rigid bond between the laminates cannot be achieved, an interlayer slip occurs, that significantly can affect both strength and deformation of the layered structure.
In particular, a comparative study of different theories for the dynamic response of laminates is given in [1] and [2]. In [3], Reddy presents a review of equivalent single layer and layer-wise laminate theories and discusses their mechanical models by means of the FEM and the mesh superposition technique.
If rigid bond between the laminates cannot be achieved, an interlayer slip occurs, that significantly can affect both strength and deformation of the layered structure. The mechanical behavior of layered beams and plates with flexible connection has been mainly discussed for civil engineering structures, compare [4]-[6]. Thermal and piezoelectric effects in two-layer beams are treated in [7] and [8], respectively. Murakami [9] proposes a general formulation of the boundary value problem, where any interlayer slip law can be adopted in the beam model.

A correspondence between the analyses of sandwich beams with or without interlayer slip has been derived by the author in Refs. [10] and [11].

## 2 FIRST ORDER SHEAR DEFORMATION LAMINATION THEORY

### 2.1 LAYERED BEAMS

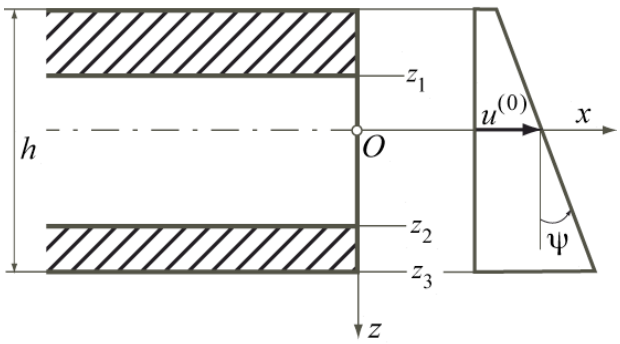


***Figure 1:*** *Geometry and axial deformation of a three-layer beam according to the first-order shear deformation lamination theory*

Considering a layered beam to bend cylindrically and including the effect of transverse shear by means of Timoshenko's kinematic hypothesis the displacement field is expressed as (compare Figure 1)

[1] Rudolf Heuer, TU Wien
rudolf.heuer@tuwien.ac.at

$$\begin{pmatrix} u(x,z;t) \\ v(x,z;t) \\ w(x,z;t) \end{pmatrix} = \begin{pmatrix} u^{(0)}(x;t) + z\psi(x;t) \\ 0 \\ w(x;t) \end{pmatrix}, \tag{1}$$

where the origin of the Cartesian $(x,z)$-coordinate system is located in the global elastic centroid of the composite cross-section. $x$ represents the axial beam coordinate and $\psi(x;t)$ denotes the cross-sectional rotation.

Thus, the non-vanishing total strains at any point of the beam become

$$\begin{pmatrix} \varepsilon \\ \gamma \end{pmatrix} \equiv \begin{pmatrix} \varepsilon_x \\ \gamma_{xz} \end{pmatrix} = \begin{pmatrix} \varepsilon^{(0)} + z\psi_{,x} \\ w_{,x} + \psi \end{pmatrix}, \quad \varepsilon^{(0)} = u_{,x}^{(0)}. \tag{2}$$

The constitutive relations for a linear thermo-elastic beam can be formulated according to the generalized Hooke's law,

$$\begin{pmatrix} \sigma(x,z;t) \\ \tau(x,z;t) \end{pmatrix} = \begin{pmatrix} E\left[\varepsilon_0 + z\psi_{,x} - \alpha\theta\right] \\ G\left(w_{,x} + \psi\right) \end{pmatrix}, \tag{3}$$

where $E = E(x,z),\ G = G(x,z)$ are time-independent Young's modulus and transverse shear modulus, respectively. $\theta = \theta(x,z;t)$ represents a change of temperature with respect to a stress-free reference configuration, and $\alpha$ stands for the linear thermal expansion coefficient. Without loss of generality, we assume that $E(x,z) = E(z),\ G(x,z) = G(z)$, and $\alpha(x,z) = \alpha(z)$ in all further derivations. By means of spatial integration, the stress resultants become

$$\begin{pmatrix} N \\ M \\ Q \end{pmatrix} = \begin{bmatrix} D & 0 & 0 \\ 0 & B & 0 \\ 0 & 0 & S \end{bmatrix} \begin{pmatrix} \varepsilon_0 - \bar{\varepsilon}_\theta \\ \psi_{,x} - \bar{\kappa}_\theta \\ w_{,x} + \psi \end{pmatrix}, \tag{4}$$

$$D = \int_A E\,dA, \quad B = \int_A E z^2 dA.$$

The effective shear rigidity, $S$, follows from the concept of equivalent strain energy.

$$\bar{\varepsilon}_\theta(x;t) = \frac{1}{D}\int_A E\alpha\theta\,dA, \quad \bar{\kappa}_\theta(x;t) = \frac{1}{B}\int_A E z\alpha\theta\,dA \tag{5}$$

denote the cross-sectional means of thermal strain and curvature, respectively.

Applying the conservation of momentum and conservation of angular momentum, expressing the stress resultants by means of Eq. (4) and subsequent elimination of the cross-sectional rotation leads to a single fourth-order differential equation of motion for the beam deflection,

$$\begin{aligned} Bw_{,xxxx} + \mu\ddot{w} - \left(\frac{\mu B}{S} + I\right)\ddot{w}_{,xx} + \frac{\mu I}{S}\ddot{\ddot{w}} \\ = p - \frac{B}{S}p_{,xx} + \frac{I}{S}\ddot{p} - B\bar{\kappa}_{\theta,xx}. \end{aligned} \tag{6}$$

$p(x;t)$ is an external load distribution, and the inertia terms, containing the mass density $\rho(x)$, are

$$\mu = \int_A \rho\,dA, \quad I = \int_A \rho z^2\,dA. \tag{7}$$

Eq. (6) represents the equation of motion of a homogenized Timoshenko beam with effective parameters according to Eqs. (4), (5), and (7).

## 2.2 SYMMETRIC TREE LAYER SHALLOW SHELLS

### 2.2.1 Governing equations

For shallow shells composed of three isotropic layers with physical properties symmetrically disposed about the middle surface the corresponding equation of motion becomes, compare [12],

$$\begin{aligned} K\left(1 + \frac{n}{S}\right)\Delta\Delta w - n\left[\Delta w - 2\left(H - \frac{K}{S}\Delta H\right)\right] \\ + \mu\ddot{w} - \frac{\mu K}{S}\Delta\ddot{w} = p - \frac{K}{S}\Delta p - K(1+\nu)\Delta\bar{\kappa}_\theta, \end{aligned} \tag{8}$$

where the influence of rotatory inertia has been neglected. The corresponding effective parameters are

$$\begin{aligned} K &= \sum_{k=1}^{3}\int_{z_{k-1}}^{z_k} \frac{E_k z^2}{(1-\nu_k^2)}dz, \quad D = \sum_{k=1}^{3}\int_{z_{k-1}}^{z_k} \frac{E_k}{(1-\nu_k^2)}dz, \\ \nu &= \frac{1}{K}\sum_{k=1}^{3} K_k \nu_k, \end{aligned} \tag{9}$$

$$\begin{aligned} \bar{\varepsilon}_\theta &= \frac{1}{D(1+\nu)}\sum_{k=1}^{3}\int_{z_{k-1}}^{z_k} \frac{E_k \alpha_k \theta_k}{(1-\nu_k)}dz, \\ \bar{\kappa}_\theta &= \frac{1}{K(1+\nu)}\sum_{k=1}^{3}\int_{z_{k-1}}^{z_k} \frac{E_k \alpha_k \theta_k}{(1-\nu_k)} z\,dz. \end{aligned} \tag{10}$$

$H$ stands for the mean curvature of the middle surface, $p$ is a vertical load distribution, and $n$ denotes a nonlinear isotropic in-plane force, that is constant throughout the middle surface. The latter, in the Berger-approximation, is related to the deflection by the averaging integral (see [12])

$$n = -\frac{D}{A}\left[\frac{1}{2}\int_A w(\Delta w - 4H)dA + (1+\nu)\int_A \bar{\varepsilon}_\theta\,dA\right]. \tag{11}$$

### 2.2.2 Steady-State Motion at Primary Resonances

In order to investigate the phenomenon of primary resonance the forcing frequency is selected in the neighbourhood of an eigenfrequency of the linear structure, $\omega_L$. For a qualitative study, a single-term approximation is used

$$w(x,y;t) = c\,q^*(t)\,w^*(x,y), \tag{12}$$

where $q^*$ denotes an generalized coordinate, $c$ carry the dimension of length, and $w^*$ characterize the approximation for the spatial distribution of the flexural mode.

Substituting expression (12) into Equation (8), and going through the Galerkin's procedure leads a nonlinear ordinary diffential equation for the non-dimensional amplitudes $q^*$. Additionally, when passing over to a non-dimensional time scale,

$$t^* = \omega_L\, t, \tag{13}$$

the equation of motion is reformulated to become qualitatively

$$\left(q^*\right)'' + 2\lambda^*\left(q^*\right)' + \left(q^*\right) + b^* c^*\left(q^*\right)^2 + e^* c^{*2}\left(q^*\right)^3 = \frac{f_p^*}{c^*}\cos\left(\Omega^* t^*\right). \tag{14}$$

For steady-state response, the "perturbation method of multiple scale" according to [13] is applied to obtain the following the nonlinear frequency response equation. For the definitions of all abbreviations used in Equations (14) and (15) see [12].

$$\Omega^* = 1 + \frac{3}{8}\left(e^* - \frac{10}{9}b^{*2}\right)c^{*2} \pm \left[\left(\frac{f_p^*}{2c^*}\right)^2 - \lambda^{*2}\right]^{\frac{1}{2}} \tag{15}$$

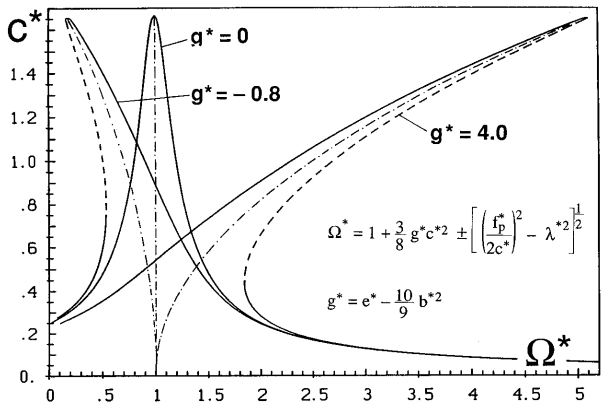


***Figure 3:*** *Nonlinear frequency response function according to Equation (15)*

# 3 SANDWICH BEAMS WITH OR WITHOUT INTERLAYER SLIP

## 3.1 GOVERNING EQUATIONS

Sandwich structures are commonly defined as three-layer type constructions consisting of two thin face layers of high-strength material attached to a moderately thick core layer of low strength and density. Effects of interlayer slip have been discussed for elastic bonding by Hoischen [4], Goodman and Popov [6], and for more general interlayer slip laws by Murakami [9]. Heuer [10] presents complete analogies between various models of viscoelastic sandwich structures, even with or without interlayer slip, with homogenized single layer structures of effective parameters.

Figure 4 shows the free-body diagram of a three-layer beam. The kinematic assumptions according to the first order shear-deformation theory are applied to each layer. For symmetrically three-layer beams with perfect bonds the following assumptions are made:

(i) The thin faces of high strength material are rigid in shear

(ii) The individual bending stiffness of the faces are not neglected

(iii) The bending stiffness of the core is neglected

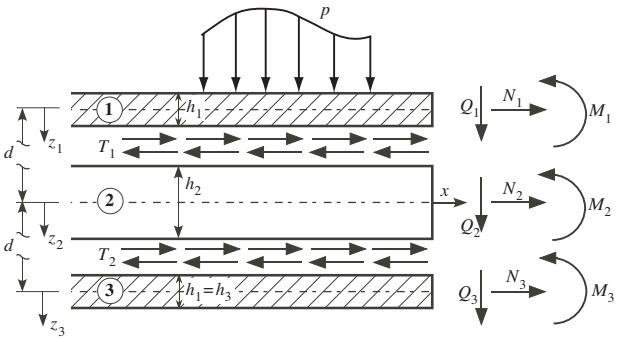


***Figure 4:*** *Geometry and stress resultants of a vertically loaded symmetric three-layer beam*

Alternatively, for sandwich beams with viscoelastic interlayer slip, see [7], the classical assumption of all three layers to be rigid in shear is made, with the shear traction in the physical interfaces of vanishing thickness being proportional to the displacement jumps with a viscoelastic interface stiffness understood. In case of elastic interface stiffness, the corresponding equation of motion (considering both external loading and imposed thermal curvature) reads

$$w_{,xxxxxx} - \lambda^2 w_{,xxxx} + \frac{\mu}{B_0}\ddot{w}_{,xx} - \lambda^2\frac{\mu}{B_\infty}\ddot{w} = -\frac{\lambda^2}{B_\infty}p + \frac{1}{B_0}p_{,xx} + \lambda^2\kappa_{,xx} - \kappa^{(0)}{}_{,xxxx}, \tag{16}$$

where

$$\kappa = \frac{1}{B_\infty}\int_A E\,\varepsilon^*_{xx}\,z_2\,dA\,,\ \kappa^{(0)} = \frac{1}{B_0}\sum_{i=1}^{3} B_i\,\kappa_i\,,\ \ \varepsilon^*_{xx} = \alpha\theta \qquad (17)$$

describe the influence of thermal loading.

$B_0$ and $B_\infty$ denote the bending stiffness of the non-composite and of the perfectly bonded three-layer beam, respectively. The shear coefficient $\lambda^2$ is either proportional to the core's shear modulus $G_2$ in the case of perfectly bonded interfaces, cf. [10],

$$\lambda^2 = \frac{2S_2}{h_2^2}\frac{B_\infty}{D_1 B_0} = \left(\kappa^2 G_2\right)\frac{2b}{h_2}\frac{B_\infty}{D_1 B_0}, \qquad (18)$$

or, for the symmetric three-layer beam with elastic interlayer slip, it becomes proportional to the elastic stiffness $k$ when common to both physical interfaces

$$\lambda^2 = k\frac{B_\infty}{D_1 B_0}. \qquad (19)$$

For the sake of completeness, the gross bending moment and the shear force can be formulated in relation to the deflection $w$ and its derivatives:

$$M = -B_\infty(w_{,xx} + \kappa_\theta) + \frac{B_\infty}{\lambda^2}\left[w_{,xxxx} + \frac{(\mu\ddot{w} - p)}{B_0} + \kappa^{(0)}_{\theta,xx}\right] \qquad (20)$$

$$Q = -B_\infty(w_{,xxx} + \kappa_{\theta,x}) + \frac{B_\infty}{\lambda^2}\left[w_{,xxxxx} + \frac{(\mu\ddot{w}_{,x} - p_{,x})}{B_0} + \kappa^{(0)}_{\theta,xxx}\right] \qquad (21)$$

### 3.2 EXAMPLE PROBLEM

In the following numerical example, a simply supported sandwich beam (length $l$) is harmonically excited by means of thermal strains applied to the two face layers:

$$\varepsilon^*_{xx}(x, z_i; t) = \tilde{\varepsilon}^*_{xx}(x, z_i)\,e^{i\nu t}, \qquad (22)$$

$$\tilde{\varepsilon}^*_{xx}(x, z_3) = -\tilde{\varepsilon}^*_{xx}(x, z_1) = const. \qquad (23)$$

Figure 4 shows the frequency response function of deflection $w$ for various non-dimensional shear coefficients $\hat{\lambda}^2 = \lambda^2 l^2$.

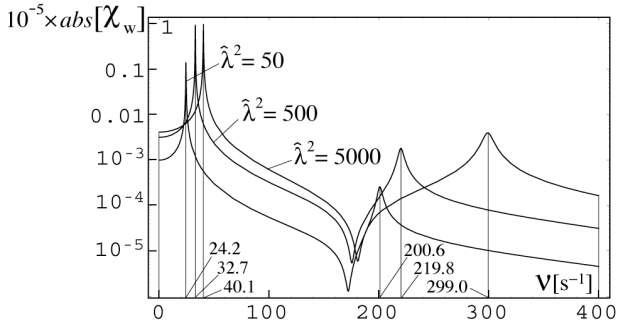


***Figure 4:*** *Frequency response function of a thermally loaded sandwich beam for various shear coefficients*

## 4 CONCLUSIONS

Various flexural theories for dynamically excited layered structures composed of moderately thick layers are compared. Three-layer composites according to the laminate theory and beams with elastic interlayer slip, can be treated as homogenized single layer structures of effective parameters. Thus, a correspondence between the analyses of sandwich beams with or without interlayer slip can been derived. Considering moderate large deflections of shallow shells, a non-dimensional representation of nonlinear forced oscillations are presented in frequency domain.

## REFERENCES


[1] Reddy, J.N.: A Simple Higher-Order Theory for Laminated Composite Plates., J. Appl. Mech. **51**, 745-752, 1984.

[2] H. Irschik, H.: On Vibrations of Layered Beams and Plates. ZAMM **73**, T34 - T45, 1993.

[3] Reddy, J.N.: An Evaluation of Equivalent-Single-Layer and Layerwise Theories of Composite Laminates. Comp. Struct. **25**, 21 - 35, 1993.

[4] Hoischen, A.: Verbundträger mit elastischer und unterbrochener Verdübelung. Bauingenieur **29**, 241 - 244, 1954.

[5] Pischl, R.: Ein Beitrag zur Berechnung hölzener Biegeträger. Bauingenieur **43**, 448 - 451, 1968.

[6] Goodman, J.R., Popov, E.P.: Layered Beam Systems With Interlayer Slip. J. Struct. Div., ASCE **94**, 2535 - 2547, 1968.

[7] Adam, C., Heuer, R., Raue, A., Ziegler, F.: Thermally Induced Vibrations of Composite Beams with Interlayer Slip. J. Thermal Stresses **23**, 747 - 772, 2000.

[8] Heuer, R., Adam, C.: Piezoelectric Vibrations of Composite Beams with Interlayer Slip. Acta Mechanica **140**, 247 - 263, 2000.

[9] Murakami, H.: A Laminated Beam Theory With Interlayer Slip. J. Appl. Mech. **51**, 551 - 559, 1984.

[10] Heuer, R.: A Correspondence for the Analysis of Sandwich Beams With or Without Interlayer Slip. Mechanics of Advanced Materials and Structures **11**, 425 - 432, 2004.

[11] Heuer, R., Adam, C., Ziegler, F.: Sandwich Panels with Interlayer Slip Subjected to Thermal Loads. J. Thermal Stresses **26**, 1185 - 1192, 2003.

[12] Heuer, R.: Large Flexural Vibrations of Thermally Stressed Layered Shallow Shells. Nonlinear Dynamics **5**, 25 - 38, 1994.

[13] Nayfeh, A.H., Mook, D.T.: Nonlinear Oscillations. Wiley New York, 1979.