# A Floating Double Buck-Boost Converter as Driver for a Permanent Exited DC Machine

2021 International Conference on Electrical Drives & Power Electronics (EDPE) | 978-1-6654-3235-1/21/$31.00 ©2021 IEEE | DOI: 10.1109/EDPE53134.2021.9604062

Felix A. Himmelstoss
Electronics Department
UAS Technikum Wien
Wien, Austria
felix.himmelstoss@technikum-wien.at

Helmut L. Votzi
Electronics Department
UAS Technikum Wien
Wien, Austria
helmut.votzi@technikum-wien.at

***Abstract*—Every year still hundreds of millions of DC drives are built in the low voltage area because of the simplicity of the machine. But only very few papers are published concerning converters for them. Here a floating double buck-boost converter is treated with some interesting features (reduced voltage stress across the devices and higher voltage transformation ratio). The converter is explained and important connections between the voltages and the currents are derived. The design is presented, the large signal and the small signal models are given, the transfer function derived and a simple feedforward-controller is designed and verified by simulations.**

***Keywords— DC/DC converter, permanent magnet DC machine, modelling***

## I. Introduction

Only few papers were published in the last years concerning converters for brushed DC-motor drives. Looking at market analyzes [1], however, one can see a still rising market for brushed DC-machines. The necessary voltage transformation ratio must have a step-down feature to start the machine with low voltage, because the source voltage of the machine is dependent on the speed. The difference of the machine source voltage and the voltage across the terminals of the machine evaluates the current through the machine. The output voltage of the converter must therefore start with about ten percent (depending on the machine) of the input voltage. Especially for lower voltage systems an additional step-up feature can be useful. In this paper we study a possible converter topology with step-up-down characteristic, which is derived from [2]. Extensive information concerning converters can be found in the textbooks [3, 4, 5]. An adaption of the modified buck-boost converter [6] can be found in [7] as an example for the adaptation of converter topologies for the control of brushed DC machines. Important topological research for converters can be found e.g. in [8-11].

Fig. 1 shows the circuit of the converter for achieving a one-quadrant drive. The converter consists of one active switch $S_1$, two diodes $D_2$, $D_3$ (the numbers are chosen in this way, because in the two-quadrant version all semiconductors have to be active switches), two capacitors $C_1$, $C_2$, and an inductor $L_1$. Either the input or the output is floating. This limits to a certain degree the application of this converter for security reasons.

The converter in the one-quadrant version is applicable for driving pumps and blowers, were no controlled braking is necessary. When controlled braking is required, the diodes have to be replaced by active switches (Fig. 2). To avoid a short-circuit at the bridge, a dead time has to be inserted. Therefore, diodes antiparallel to the active switches are necessary (especially when IGBTs are used).

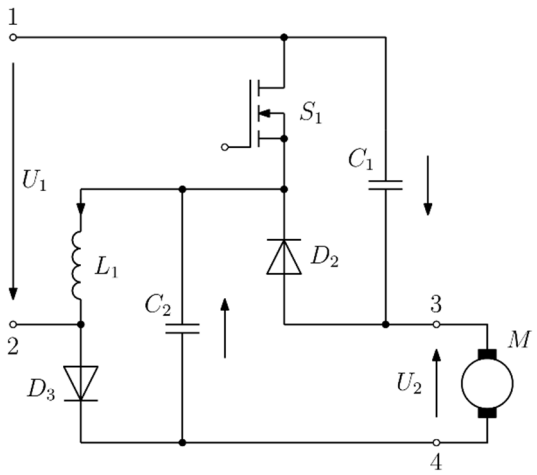


Fig. 1. 1-Q (quadrant) motor drive.

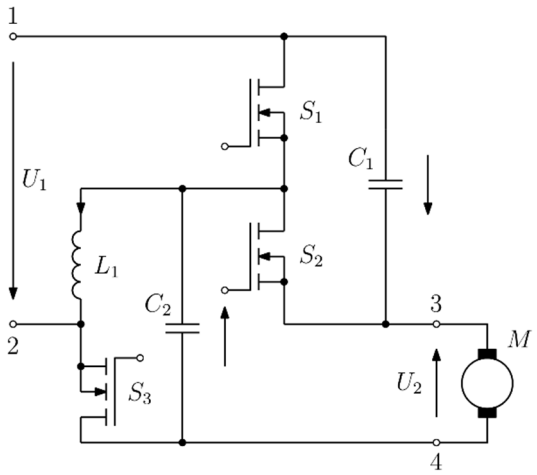


Fig. 2. 2-Q (quadrant) motor drive.

For larger power and higher voltages one would use IGBTs with antiparallel diodes. In this case $S_1$ would be controlled and $S_2$ and $S_3$ would be blocked for the motoring operation. So only the diodes would be used. When braking is

necessary, the active switches $S_2$ and $S_3$ are used and $S_1$ is blocked, so only the diode of $S_1$ feeds back the energy. When MOSFETs are used, the forward voltage of the transistor is lower than that of a diode. Therefore, it can be advisable to use the active switches also when only one-quadrant operation is necessary (synchronous rectification).

## II. Basic Function

We study the basic function of the floating double buck-boost converter with permanent DC machine as load. Floating means that the input or the output can be grounded, but not both.

We simplify the drive with the usual assumptions:

- Ideal devices (even the machine has no armature resistor in this first step)
- The drive is in steady-state mode
- The capacitors are so large that the voltage across them is nearly constant within one switching period

Continuous inductor current mode CICM, that means that the current through the inductor of the converter $L_1$ and through the machine $L_A$ does not reach zero during one switching period.

The system has two modes. In mode M1 the active switch $S_1$ is conducting and the diodes are blocked, and in mode M2 the diodes $D_2$ and $D_3$ are conducting and the switch $S_1$ is turned off.

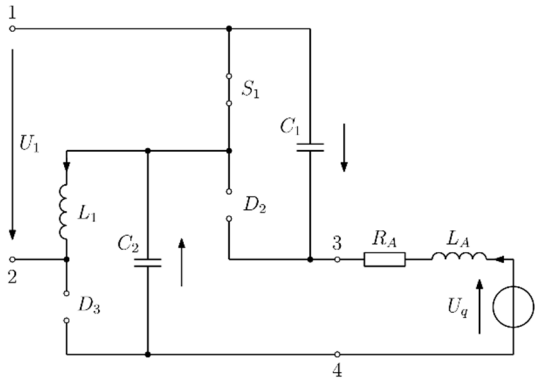


Fig. 3. Equivalent circuit for mode M1.

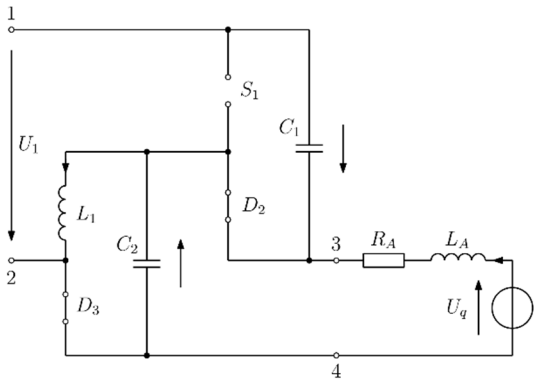


Fig. 4. Equivalent circuit for mode M2.

In the two-quadrant case (or when synchronous rectification is used) in mode M1 $S_1$ is conducting and in mode M2 $S_2$ and $S_3$ are conducting. Fig. 3 and Fig. 4 show the equivalent circuits for Mode M1 and M2, respectively. The armature resistor is included, because this is the dominant resistor in the systems. The machine is modelled with this resistor $R_A$, the source voltage $U_q$ and the armature inductor $L_A$.

### A. Voltage transformation ratio

For the voltage-time balance one can write for the converter inductor

$$U_1 d = U_{C2}(1-d) \tag{1}$$

and for the armature inductor with $U_q$ as the source voltage of the machine

$$\left(-U_q + U_{C2} + U_{C1}\right)d = \left|-U_q + U_{C2}\right|(1-d)\ . \tag{2}$$

Furthermore, one can see that the input voltage is always

$$U_1 = U_{C1} - U_q + U_{C2}\ . \tag{3}$$

Therefore, one can simplify (2) to

$$U_1 d = \left|-U_q + U_{C2}\right|(1-d) \tag{4}$$

which leads with the help of (1) to

$$U_q = \frac{2d}{1-d} U_1\ . \tag{5}$$

The connection between the source voltage of the machine and the input voltage can be interpreted as a double buck-boost converter.

The speed of the machine, with $C_E$ as its armature voltage constant, is now given according to

$$n = \frac{1}{C_E}\frac{2d}{1-d} U_1\ . \tag{6}$$

Fig. 5 shows the voltages across the inductors $L_1$, $L_A$ and across the capacitors $C_1$, $C_2$, the input and output voltages of the converter and the source voltage which is proportional to the speed. The voltage across the terminals is pulsating.

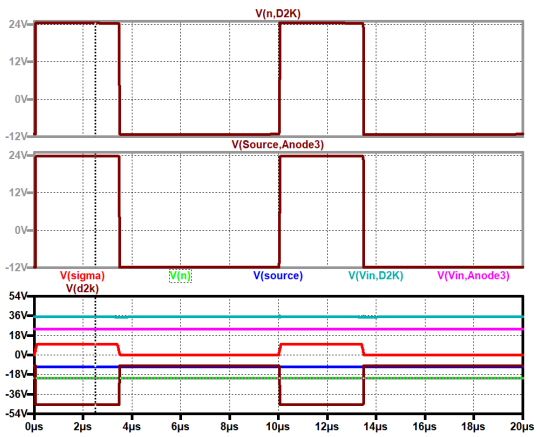


Fig. 5. Up to down: voltage across $L_2$, $L_1$; voltage across $C_1$ (turquoise), input voltage (violet), control signal (red), voltage across $C_2$ (blue), armature voltage (black), machine source voltage (green).

## B. *Voltage stress across the devices*

For the voltages across the capacitors one gets in dependence on the input voltage and the duty cycle

$$U_{C2} = \frac{d}{1-d} U_1 . \tag{7}$$

$$U_{C1} = \frac{1}{1-d} U_1 . \tag{8}$$

The voltage across $C_2$ has a buck-boost and across $C_1$ a boost behavior. Now one can easily calculate the voltage stress $U_{SD}$ across each semiconductor ($S_1$, $S_2$, $S_3/S_1$, $D_2$, $D_3$)

$$U_{SD} = \frac{1}{1-d} U_1 . \tag{9}$$

With the mean voltage across the armature terminals $U_2$, the duty cycle d can be given as

$$d = \frac{U_2}{2U_1 + U_2} . \tag{10}$$

This leads to

$$U_{SD} = \frac{2U_1 + U_2}{2} . \tag{11}$$

One can also write for the voltages across the capacitors

$$U_{C1} = \frac{2U_1 + U_2}{2} . \tag{12}$$

$$U_{C2} = \frac{U_2}{2} . \tag{13}$$

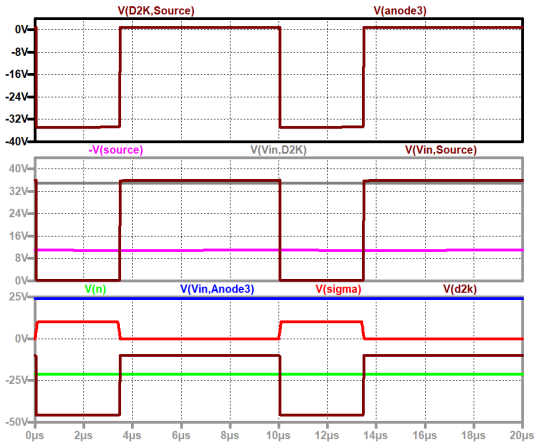


Fig. 6. Up to down: voltages across the diodes; voltage across active switch (black), $C_1$ (grey), $C_2$ (violet); input voltage (blue), control signal (red), armature voltage (black), source voltage of the machine (green).

The maximum voltage across the inductor of the converter depends on the input and output voltages according to

$$|U_{L1}| = \max\left\{U_1, \frac{U_2}{2}\right\} . \tag{14}$$

Fig. 6 shows the voltages across the devices of the converter and across the machine and the source voltage. The load current was chosen to 5 A and the armature resistor has the value of 0.2 Ω.

## C. *Connection between the currents*

The current through the armature inductance is in steady state equal to the load current (which depends on the load torque, in this case equal to the torque that the machine produces, $C_T$ is the torque constant of the machine)

$$\bar{I}_{LA} = I_{Load} = \frac{M_{Load}}{C_T} . \tag{15}$$

For the capacitor $C_2$ one can write for the charge balance

$$\left|-\bar{I}_{LA}\right| d = \frac{\bar{I}_{L1} - \bar{I}_{LA}}{2}(1-d) . \tag{16}$$

The reason is that the two capacitors are in parallel during mode M2. Therefore, one can write for equal capacitors

$$i_C = \frac{i_{L1} - i_{LA}}{2} . \tag{17}$$

The current in the mean through $L_1$ is therefore

$$\bar{I}_{L1} = \frac{1+d}{1-d} I_{Load} = \frac{1+d}{1-d} I_{LA} . \tag{18}$$

Fig. 7 shows the currents through the devices. Up to down one can see the currents through $C_2$, $C_1$, $D_3$, $D_2$, $S_1$, and the currents through the inductors.

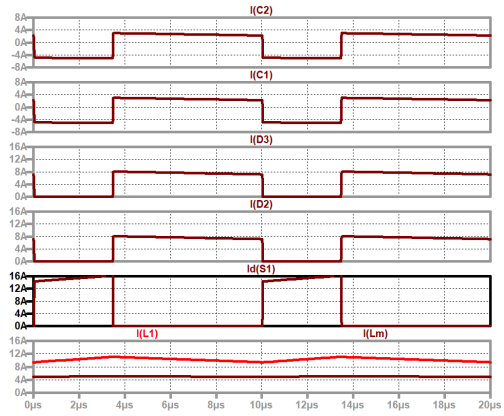


Fig. 7. Up to down: currents through capacitor $C_2$; capacitor $C_1$; diode $D_3$; diode $D_2$; active switch $S_1$; converter inductor $L_1$ (red), armature current $L_M$.

# III. *Modelling of a Floating DC Motor Drive*

## A. *State space model*

An interesting aspect of this converter is the fact, that during mode M1 the same current is flowing through both capacitors. Therefore, the model is reduced to a fourth order one. It is clever to choose for both capacitors the same value, so that the change of voltage is the same, because in mode M2 both capacitors are connected (in the AC model, the input voltage is shorted) in parallel and a balance current would occur. The voltage across $C_2$ can be given by

$$u_{C2} = -u_1 + u_{C1}\,. \tag{19}$$

Using the state-space averaging method one gets now a fourth-order large signal model with equal capacitors, $C_M$ as torque constant, and $C_E$ as constant of the source voltage of the machine (emc-constant)

$$\frac{d}{dt}\begin{pmatrix} i_{L1} \\ i_{LA} \\ u_{C1} \\ n \end{pmatrix} = \begin{bmatrix} 0 & 0 & \frac{d-1}{L_1} & 0 \\ 0 & -\frac{R_A}{L_A} & \frac{d+1}{L_A} & -\frac{C_E}{L_A} \\ \frac{1-d}{2C_1} & -\frac{d+1}{2C_1} & 0 & 0 \\ 0 & \frac{C_M}{2\pi J} & 0 & 0 \end{bmatrix}\begin{pmatrix} i_{L1} \\ i_{LA} \\ u_{C1} \\ n \end{pmatrix} + \begin{bmatrix} \frac{1}{L_1} & 0 \\ -\frac{1}{L_A} & 0 \\ 0 & 0 \\ 0 & -\frac{1}{2\pi J} \end{bmatrix}\begin{pmatrix} u_1 \\ m_{Load} \end{pmatrix}. \tag{20}$$

The linearized model can be calculated to

$$\frac{d}{dt}\begin{pmatrix} \hat{i}_{L1} \\ \hat{i}_{LA} \\ \hat{u}_{C1} \\ \hat{n} \end{pmatrix} = \begin{bmatrix} 0 & 0 & \frac{D_0-1}{L_1} & 0 \\ 0 & -\frac{R_A}{L_A} & \frac{D_0+1}{L_A} & -\frac{C_E}{L_A} \\ \frac{1-D_0}{2C_1} & -\frac{D_0+1}{2C_1} & 0 & 0 \\ 0 & \frac{C_M}{2\pi J} & 0 & 0 \end{bmatrix}\begin{pmatrix} \hat{i}_{L1} \\ \hat{i}_{LA} \\ \hat{u}_{C1} \\ \hat{n} \end{pmatrix} + \begin{bmatrix} \frac{1}{L_1} & 0 & \frac{U_{C10}}{L_1} \\ -\frac{1}{L_A} & 0 & \frac{U_{C10}}{L_A} \\ 0 & 0 & -\frac{I_{L10}+I_{LA0}}{C_1} \\ 0 & -\frac{1}{2\pi J} & 0 \end{bmatrix}\begin{pmatrix} \hat{u}_1 \\ \hat{m}_{Load} \\ \hat{d} \end{pmatrix} \tag{21}$$

For the connections between the values at the working point one gets

$$U_{C10} = \frac{1}{1-D_0}U_{10},\ N_0 = \frac{1}{C_E}\left(-R_A I_{LA0} + \frac{2D_0}{1-D_0}U_{10}\right) \tag{22}$$

$$I_{L10} = \frac{1+D_0}{1-D_0}I_{LA0},\ M_{Load0} = C_M L_{LA0}\,. \tag{23}$$

### B. *Transfer functions*

With four state variables and three input variables twelve transfer functions can be calculated. The most important ones are those which describe the influence of the input variables on the speed. The denominator is calculated from the determinant of the coefficient matrix and is the same for all transfer functions.

Using abbreviations for the matrix elements in (21)

$$\frac{d}{dt}\begin{pmatrix} \hat{i}_L \\ \hat{i}_{LM} \\ \hat{u}_C \\ \hat{n} \end{pmatrix} = \begin{bmatrix} 0 & 0 & A_{13} & 0 \\ 0 & A_{22} & A_{23} & A_{24} \\ A_{31} & A_{32} & 0 & 0 \\ 0 & A_{42} & 0 & 0 \end{bmatrix}\begin{pmatrix} \hat{i}_L \\ \hat{i}_{LA} \\ \hat{u}_C \\ \hat{n} \end{pmatrix} + \begin{bmatrix} B_{11} & 0 & B_{13} \\ B_{21} & 0 & B_{23} \\ 0 & 0 & B_{33} \\ 0 & B_{42} & 0 \end{bmatrix}\begin{pmatrix} \hat{u}_1 \\ \hat{m}_{Load} \\ \hat{d} \end{pmatrix}, \tag{24}$$

and using the Laplace transformation leads to

$$\begin{bmatrix} s & 0 & -A_{13} & 0 \\ 0 & s-A_{22} & -A_{23} & -A_{24} \\ -A_{31} & -A_{32} & s & 0 \\ 0 & -A_{42} & 0 & s \end{bmatrix}\begin{pmatrix} I_L(s) \\ I_{LA}(s) \\ U_C(s) \\ N(s) \end{pmatrix} = \begin{bmatrix} B_{11} & 0 & B_{13} \\ B_{21} & 0 & B_{23} \\ 0 & 0 & B_{33} \\ 0 & B_{42} & 0 \end{bmatrix}\begin{pmatrix} U_1(s) \\ M_{Load}(s) \\ N(s) \end{pmatrix} \tag{25}$$

Now one calculate the denominator according to

$$D = s^4 - s^3 A_{22} - s^2\left(A_{24}A_{42} + A_{13}A_{31} + A_{23}A_{32}\right) + \\ + sA_{13}A_{22}A_{31} + A_{13}A_{24}A_{31}A_{42}\,. \tag{26}$$

The most important transfer function describes the connection between speed and duty cycle, this describes the system to be controlled. The numerator can be calculated with the help of Cramer's law according to

$$N\_ND = s^2 A_{42}B_{23} + sA_{23}A_{42}B_{33} + A_{23}A_{31}A_{42}B_{13} - A_{13}A_{31}A_{42}B_{23}\,. \tag{27}$$

The disturbances of the system are the input voltage and the momentum of the load. The numerators can be calculated according to

$$N\_NU = A_{42}\left[s^2 B_{21} - A_{13}A_{31}B_{21} + A_{23}A_{31}B_{11}\right], \tag{28}$$

$$N\_NM = B_{42}\left(s^3 - s^2 A_{22} - s\left(A_{13}A_{31} + A_{23}A_{32}\right) + A_{13}A_{22}A_{31}\right), \tag{29}$$

respectively.

Now one can construct Bode diagrams and can use the linear control theory to design a PI or PID controller. In this paper, however, a feedforward controller is described.

## IV. *Feedforward Control of the Converter*

A simple control technique which avoids the measurement of the speed and also the feedback is a feedforward control. In this case changes of the input voltage can be compensated, but load changes lead to deviation of the speed. Starting from (6) one can calculate the duty cycle for a speed $n_{ref}$ and an input voltage $U_1$ according to

$$d = \frac{C_E n_{ref}}{C_E n_{ref} + 2U_1}\,. \tag{30}$$

or for the source voltage of the machine $U_q = C_E n$ according to

$$d = \frac{U_{qref}}{U_{qref} + 2U_1} \quad . \tag{31}$$

This duty cycle can be easily calculated by a microcontroller or better by a signal processor. A correction factor which is dependent on the nominal load torque of the drive can reduce the speed error at the nominal point.

Fig. 8 shows in the upper picture the input voltage. 250 ms after applying the input voltage, the voltage makes a drop of about 17 % from 24 V down to 20 V. In the lower picture one can see the reference value (the blue curve) and the source voltage of the machine (green, which is proportional to the speed). The speed follows the reference. The difference is caused by the armature resistor of the machine. The drop of the input voltage has only a marginal influence on the speed due to the used control law.

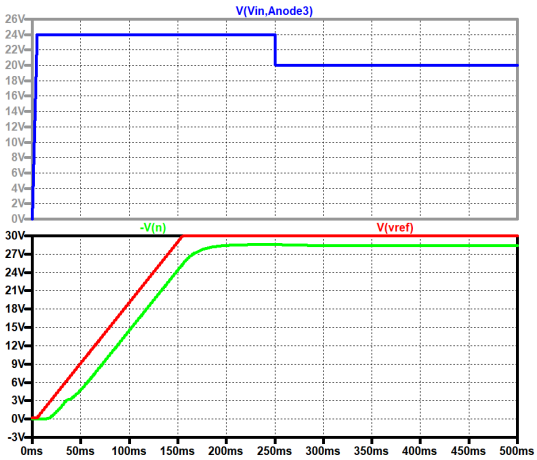


Fig. 8. up to down: input voltage (blue, step at 250 ms); reference value (red), source voltage of the machine corresponding to the speed (green).

Fig. 9 shows a load step. The load increases by 40 %. The armature current increases with the mechanical time constant according to an exponential function. The lower traces show the reference value and the speed. The speed decreases after the step of the load torque.

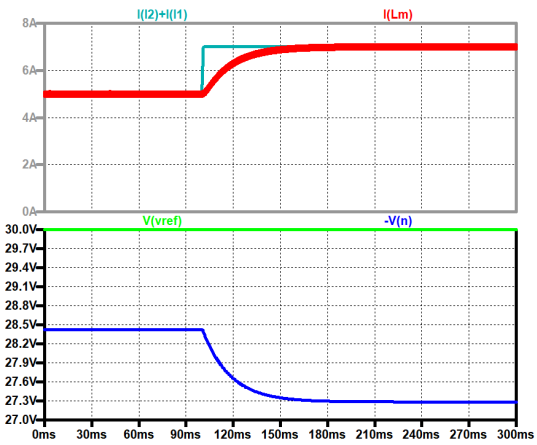


Fig. 9. Load step: load current (turquoise, which is proportional to the load torque), armature current (red); reference value (green), source voltage of the machine (blue, proportional to the speed).

Fig. 10 shows two filtered armature voltages. The voltage is filtered by simple low-pass filters with time constants of 100 µs (green) and 1 ms (red). The switching frequency is 100 kHz, therefor the time constants are 10 and 100 times larger than the switching period. The reference value of the output voltage (the source voltage) is 30 V.

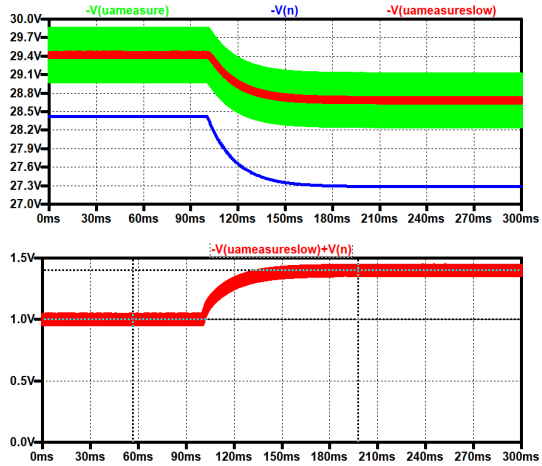


Fig. 10. Load step: filtered armature voltage (100 µs, green) (1ms, red), source voltage (blue, speed); error between filtered armature voltage and source voltage.

One can see that the mean value of the armature voltage is 0.6 V lower and after the load step 1.3 V. This can be interpreted by an output (nonlinear, not constant) resistor of the converter (with a value of 0.12 Ω or 0.19 Ω). The differences between the armature voltage and the source voltage are 1 V and 1.4 V, respectively, caused by the armature resistor of 0.2 Ω. When the first load is taken as the nominal load, one can calculate as correction resistor $R_{cor}$ 0.32 Ω. $U_q$ is therefore by $R_{cor} \cdot I_{Loadnom}$ lower than the reference value $U_{ref}$.

$$U_q = \frac{2d}{1-d} U_1 - R_{cor} I_{Loadnom} \quad . \tag{32}$$

This leads to the corrected control law

$$d = \frac{U_{ref} + R_{cor} I_{Loadnom}}{2U_1 + U_{ref} + R_{cor} I_{Loadnom}} \quad . \tag{33}$$

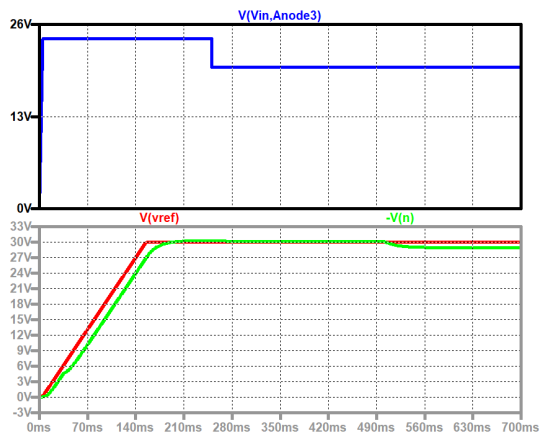


Fig. 11. Corrected control law: reaction to an input voltage step (after 250 ms) and a load step (after 500 ms) up to down: input voltage (blue); reference value (red), source voltage of the machine (green).

Fig. 11 shows the reaction to an input voltage and to a load step for the corrected control law. The reference value and the real value are equal in the stationary case. One has to keep in mind, however, that the temperature of the machine changes and therefor the value of the armature resistor changes too. The correction should be designed for an expected stationary temperature value. A change of the load from the nominal value leads naturally to an error. The load step response with the correction can be seen enlarged in Fig. 12 (same scale as Fig. 9).

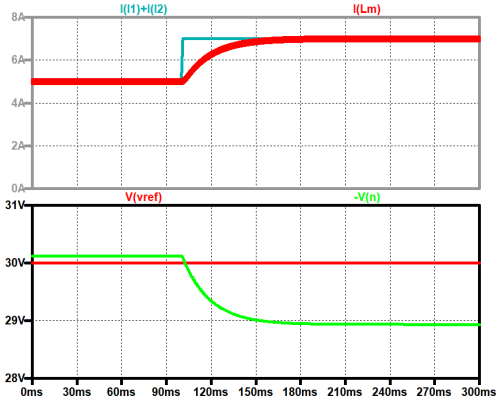


Fig. 12. Load step with correction: load current (turquoise, which is proportional to the load torque), armature current (red); reference value (green), source voltage of the machine (blue, proportional to the speed).

## V. *Simulations*

Fig. 13 shows the feed-forward controlled converter with an input voltage step at 250 ms. The reference value is constant and the speed decreases only a little bit. The current through the converter coil and the armature current show a damped ringing.

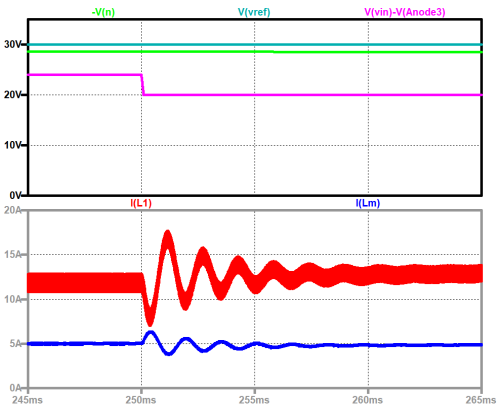


Fig. 13. Input voltage step: up to down: reference value (turquoise), speed (green), input voltage (violet); current through the converter coil (red), armature current (blue).

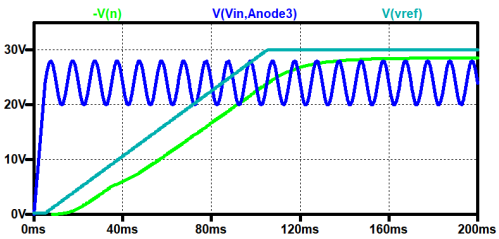


Fig. 14. Up to down: reference value (turquoise), speed (green), input voltage (blue) with 100 Hz ripple.

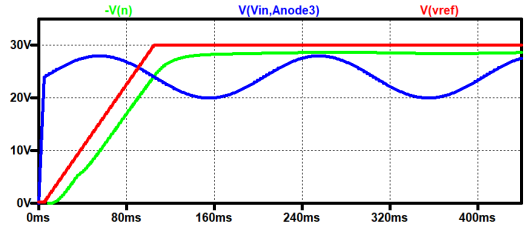


Fig. 15. Up to down: reference value (red), speed (green), input voltage (blue) with 5 Hz ripple.

Fig. 14 shows the start-up and an input voltage with a 100 Hz ripple. One can see that the feed-forward controlled converter can eliminate 100 Hz. The momentum of inertia also damps the input voltage ripple in this case, but in Fig. 15 a 20 times lower disturbance frequency is shown. The stabilization of the speed is now achieved by the controller.

## VI. *Conclusions*

A double buck-boost with only one active switch and two diodes for driving a permanent DC motor is presented. To achieve a voltage transformation ratio of three, only a duty cycle of 0.6 is necessary, and for a voltage equal to the input voltage a duty cycle of one third must be used. The converter is a step-up-down structure, which is especially useful for high step-up rates e.g. for sources with low voltage and possible high currents like batteries. It is also possible to use three active switches and no diodes. In this case the losses can be significantly reduced because of the much lower forward losses. The derived equations can also be used in this case.

## References


[1] https://www.databridgemarketresearch.com/reports/global-brushed-dc-motor-market (visited Sept 1st, 2021).

[2] N. Elsayad, H. Moradisizkoohi and O. A. Mohammed, "Design and Implementation of a New Transformerless Bidirectional DC–DC Converter With Wide Conversion Ratios," in IEEE Transactions on Industrial Electronics, vol. 66, no. 9, pp. 7067-7077, Sept. 2019

[3] N. Mohan, T. Undeland and W. Robbins, Power Electronics, Converters, Applications and Design, 3nd ed. New York: W. P. John Wiley & Sons, 2003.

[4] F. Zach, Power Electronics, in German: Leistungselektronik, Wien: Springer, 6th ed.,

[5] Y. Rozanov, S. Ryvkin, E. Chaplygin, P. Voronin, Power Electronics Basics, CRC Press, 2016.

[6] F. A. Himmelstoss, and K. H. Edelmoser, "Modified Basic DC-DC Converters," Power Conversion and Intelligent Motion PCIM 2018, pp. 1076-1083.

[7] Himmelstoss, F. A., and Edelmoser, K. H., "Modified Buck-Boost Converter as DC Motor Driver with Continuous Input Current," WSEAS Transactions of Circuits and Systems, Vol.19, pp. 186-194 2020

[8] G. Chen, Z. Jin, Y. Liu, Y. Hu, J. Zhang and X. Qing, "Programmable Topology Derivation and Analysis of Integrated Three-Port DC–DC Converters with Reduced Switches for Low-Cost Applications," IEEE Transactions on Industrial Electronics, vol. 66, no. 9, pp. 6649-6660, Sept. 2019.

[9] S. Cuk, "General topological properties of switching structures," IEEE Power Electronics Specialists Conference, San Diego, CA, USA, 1979, pp. 109-130.

[10] D. Maksimovic and S. Cuk, "Switching converters with wide DC conversion range," IEEE Transactions on Power Electronics, Vol. 6, No. 1, pp. 151-157, Jan. 1991.

[11] B. W. Williams, "Generation and Analysis of Canonical Switching Cell DC-to-DC Converters," IEEE Transactions on Industrial Electronics, Vol. 61, No. 1, pp. 329-346, Jan. 2014.