CARDIAC HYBRID CELLULAR AUTOMATA SIMULATION FOR 2D CARDIAC DYNAMICS

Conference Paper · July 2021

3 authors:

Lilly Treml
TU Wien

Alessio Gizzi
Università Campus Bio-Medico di Roma

Ezio Bartocci
TU Wien

CARDIAC HYBRID CELLULAR AUTOMATA SIMULATION FOR 2D CARDIAC DYNAMICS

Lilly Maria Treml (1), Alessio Gizzi (2), Ezio Bartocci (1)

1. Vienna University of Technology, Austria; 2. University of Rome Campus Bio-Medico, Italy

Introduction

In a recent contribution [1], we introduced a one-dimensional hybrid cellular automata (HCA) approach considering a free resistance variable to model and simulate cell-cell coupling in 1D cardiac strands. We conducted an extended computational analysis via GPU-accelerated Monte Carlo Simulation highlighting bifurcation phenomena according to conductance statistical features. We extend such an HCA approach to 2D domains to investigate the complex cardiac properties in realistic spatiotemporal scenarios in the present contribution. In particular, parameters heterogeneity is studied according to the recent literature on the subject [2-6].

Methods

We start from the 1D structures presented in [1], introducing a second spatial dimension. Specifically, additional neighbors are introduced to create a virtual 2D uni-directional monolayer of cardiac cells. Figure 1 shows a simplified representative example of the desired structures. Generalizing the 1D coupling shown in Equation 1, we consider Equation 2 in a simplified Von Neumann neighborhood:

$$(u_{i-1} - u_i) * R_v \qquad (1)$$

$$(u^i_{j-1} + u_j^{i-1} - 2u^i_j) * R_v \qquad (2)$$

Here, *j* refers to the row index, *i* to the column index, and R_v is the free resistance variable. The one-directionality of the model allows us to simplify the overall connection such that only the cells in rows >1 comprise an additional neighbor.

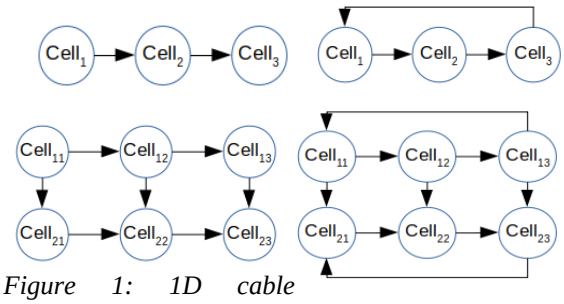

Figure 1: 1D cable structure (top left); 1D ring structure (top right); 2D plane structure (bottom left); 2D circular structure (bottom right).

We test our assumed HCA connectivity by means of standard C codes. Specifically, conduction velocity (CV) validation is provided in terms of planar waves and target patterns over a wide range of numerical and constitutive parameters. We selected resistance values of 0.5, 1.7, and 2.0 in multiple grids of size 5x750, 5x1000, 10x1000, 10x2000 & 20x 2000 cells.

Results

Our analysis shows that the excitation wave propagates successfully in all scenarios for grids < 10x2000 cells. In low resistance cases (Rv = 0.5), no CV could be recovered in bigger grids. The CV computation also failed for the plane structure in the 20x2000 grid with a resistance value of 1.7. The circular design proved self-sustainability as we could compute a CV for the bigger grids with the higher resistance values. Besides, we did not observe any significant deviation between circular and planar structures while observing comparable results with the 1D structure behavior.

Discussion

The estimation of cardiac conductivity in an extended spatiotemporal framework is a well-known open issue in the literature [6,7]. By adopting an HCA approach with a free resistance variable to describe cell-cell coupling, we can get fine control of the underlying spatiotemporal dynamics. In such a scenario, we foresee using advanced strategies of fast simulation and analyses, e.g., machine learning approaches or optimization algorithms that map the free resistance variable to a specific conduction velocity. We plan to improve our numerical model by using GPU-based implementation, thus combining our current approach with hardware accelerators, such as FPGAs that are becoming more and more employed to handle extensive computational problems.

References

1. Treml et al., Mathematics, **9**:164, 2021.
2. Fenton et al., Phys Rev E, **87**:4, 2013.
3. Burger, Inv Probl, **27**:8, 2011.
4. Clerx et al., Biophys J, **117**:2420-2437, 2019.
5. Weinberg, Chaos, **27**:9, 2017.
6. Barone et al., Chaos, **27**:9, 2017.
7. Barone et al., J Comput Phys, 423, 2020.

Acknowledgements

The Authors acknowledge the support of the Italian National Group of Mathematical Physics (GNFM-INdAM).